GENIUS

GTC8.25

INSTRUCTION MANUAL

2025

NITRO - ELECTRIC

INDEX

1. DIFFERENTIALS
2. DIFFERENTIALS
3. DIFFERENTIALS
4. DIFFERENTIALS
5. DIFFERENTIALS
6 GEAR BOX
7. GEAR BOX
8. GEAR BOX
9. CENTER SOLD SHAFT E BRAKE
10. CENTER MOUNT E MOTOR
11. CENTER SOLD SHAFT E BRAKE
12. CENTER SOLID SHAFT E MOUNT
13. REAR ASSEMBLING
14. REAR BULKHEAD
15. REAR BALL DRIVE SHAFT
16. REAR BALL DRIVE SHAFT
17. REAR REINCORCEMENT BRACE
18. FRONT BULKHEAD
19. FRONT BALL DRIVE
20. LOWER SUSPENCION ARM REAR
21. REAR UPRIGHT
22. REAR ROLLBARS ARMS
23. REAR UPRIGHT ARMS
24. REAR ANTI ROLLBAR
25. REAR ASSEMBLING
26. LOWER SUSPENSION ARMS FRONT
27. FRONT ANTI ROLLBAR
28. FRONT UPRIGHT
29. LOW. SUSP. ARM FRONT MOUNT.
30. ASSEMBLING FRONT UP ARMS
31. STEARING ARMS
32. SERVO SAVER
33. FRONT ASSEMBLING
34. SPRINGS E OILS
35. SPRING LIST
36. SHOCK ABSORBERS
37. SHOCK ASSEMBLING
38. FRONT BAUMPER ASSEMBLING
39. GAS BRAKES ARMS
40. RADIO PLATE NITRO
41. RADIO PLATE ASSEMBLING
42. RADIO PLATE ECO
43. BATTERY E RADIO MOUNT
44. CLUTCH E FUEL TANK
45. CLUTCH ASSEMBLING
46. CLUTCH ASSEMBLING
47. MOTOR MOUNT GEARS
48. OPTIONALS NITRO
49. OPTIONALS ECO

BAGS INCLUDING IN THE KIT	
NITRO	ECO
1	1
2	3
3	5
4	6
5	7
6	8
7	10
8	11
10	12
12	13
14	
15	

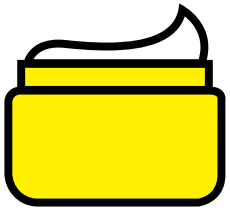

GREASE
GE00310.20

GREEN GLUE
GE04000.03

BLUE GLUE
GE04000.02

ONE WAY
GE00310.50

GTC8.25

NITRO + ECO

BAG 1

GT851276 DIFFERENTIAL 42T - SET

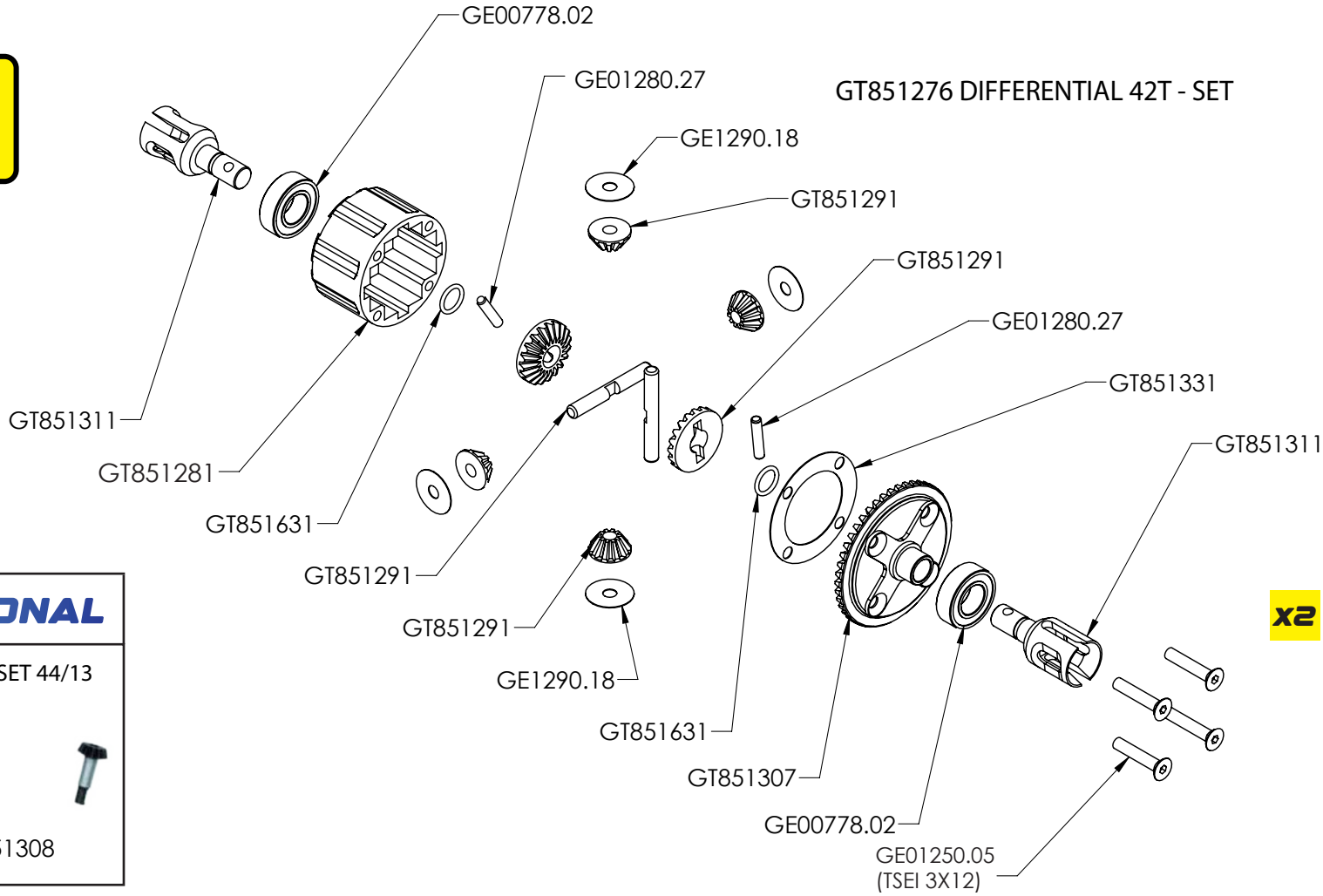

OPTIONAL

DIF GEAR SET 44/13

GT851308

GTC8.25

NITRO + ECO

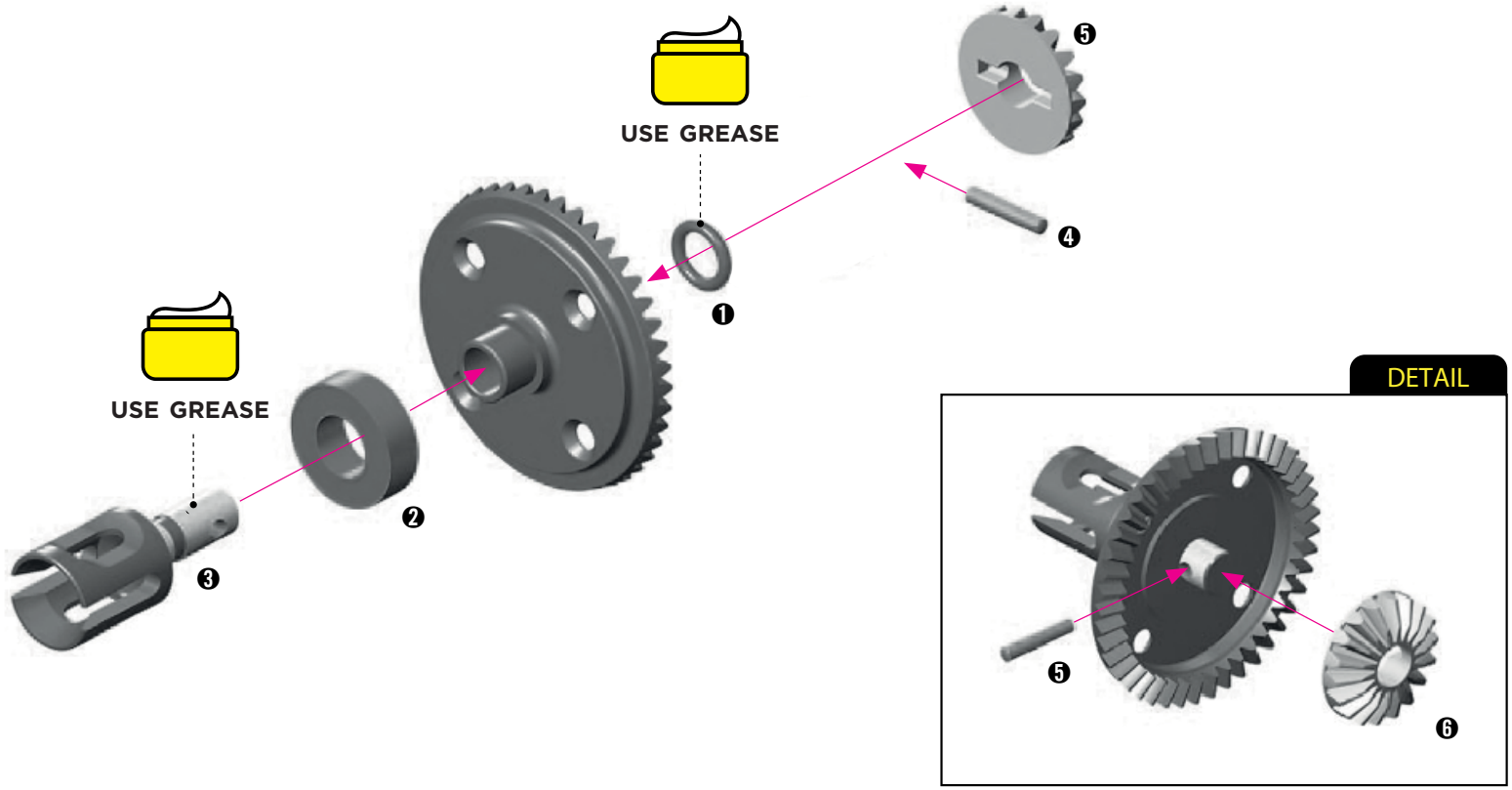

GTC8.25

NITRO + ECO

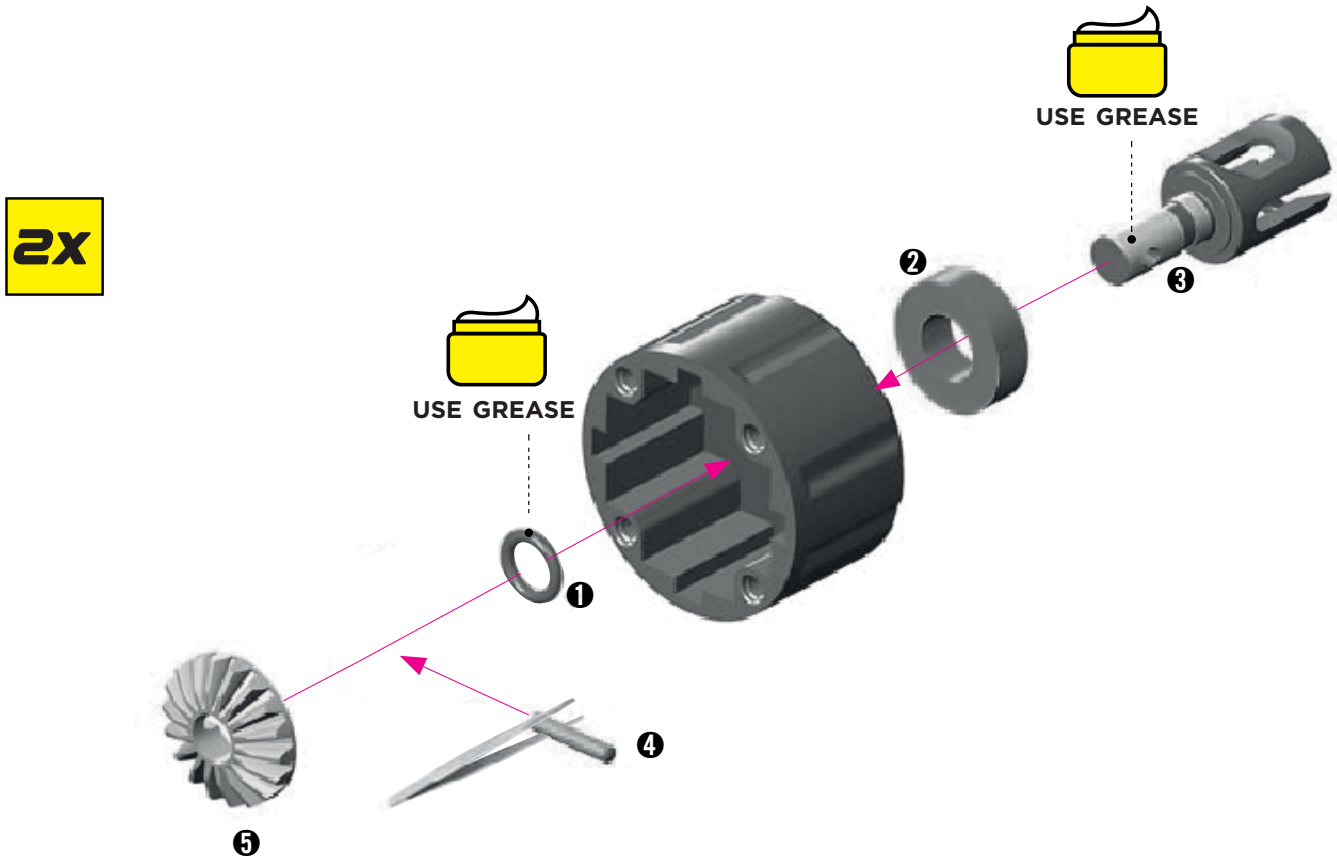

NITRO + ECO

FRONT diff: 500.000cst / REAR diff: 10.000cSt

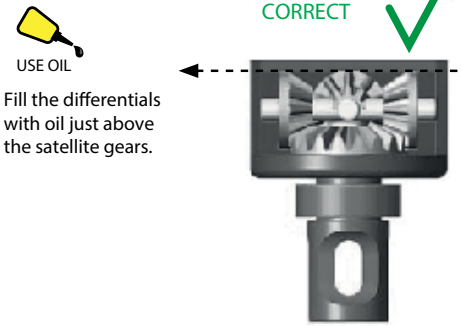

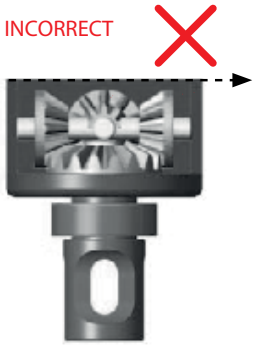

Fill the differentials with oil just above the satellite gears.

Tighten the screws equally

Finish tightening in this order

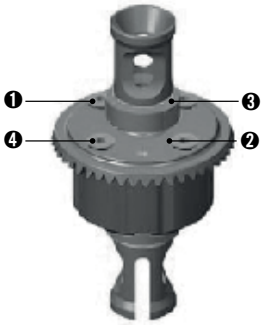

After assembly the differentials should have a length of 32.3~32.5 mm measured from the ends of the installed ball-bearings.
If differentials are longer, retighten the 4 screws holding the crown gears.

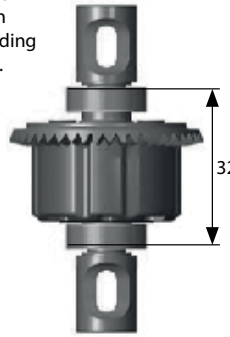

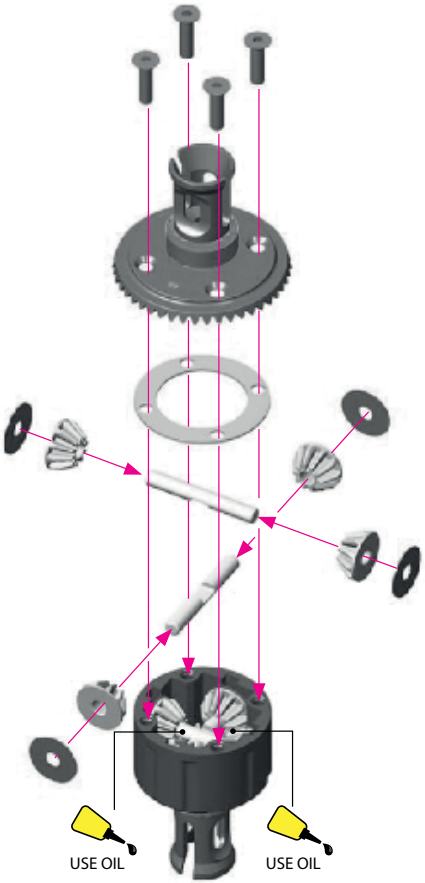

FRONT & REAR DIFF GEAR MESH ADJUSTMENT

THE LOCATION OF THE SHIM(S) DEPENDS ON WHETHER YOU ARE TRYING TO CLOSE OR OPEN THE GAP.

If there is too much or too little diff side play, this may create non-optimal gear mesh between the diff gear and the pinion drive gear. This is easily resolved by inserting 1 or 2 of the included thin shims behind a diff outdrive ball-bearing , depending on how much play there is.

NITRO + ECO

TO CLOSE A WIDE GAP

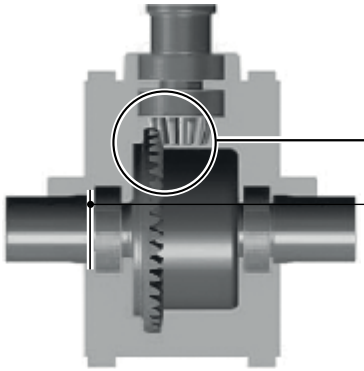

CLOSE A WIDE GAP

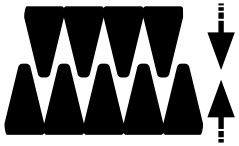

To C LOSE a wide gap:
add 1 or 2 shims
against diff spur gear

insert shim(s) here

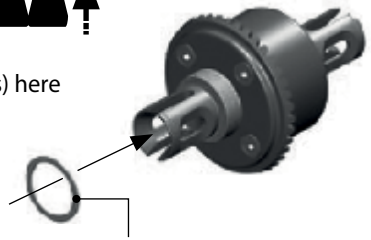

WASHER S 13 x 16 x 0.1 mm (10) (art. GE01291.11)
S 13 x 16 x 0.2 mm (10) (art. GE01291.12)

TO OPEN A NARROW GAP

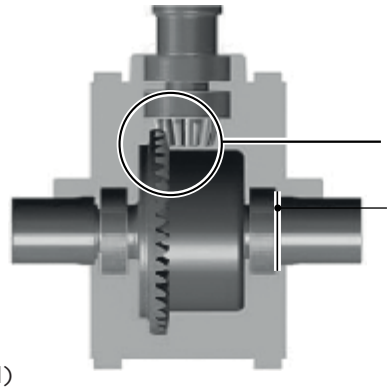

OPEN A NARROW GAP

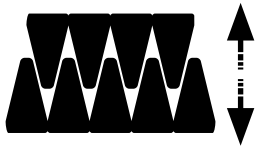

To OPEN a narrow gap:
add 1 or 2 shims on
the other side of the diff,
away from spur gear

insert shim(s) here

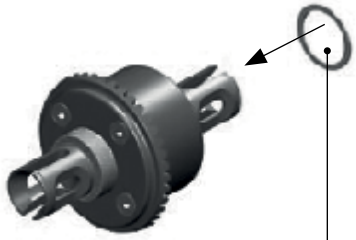

WASHER S 13x16x0.1mm (10)
S 13x16x0.2mm (10)

GTC8.25

NITRO

BAG 2

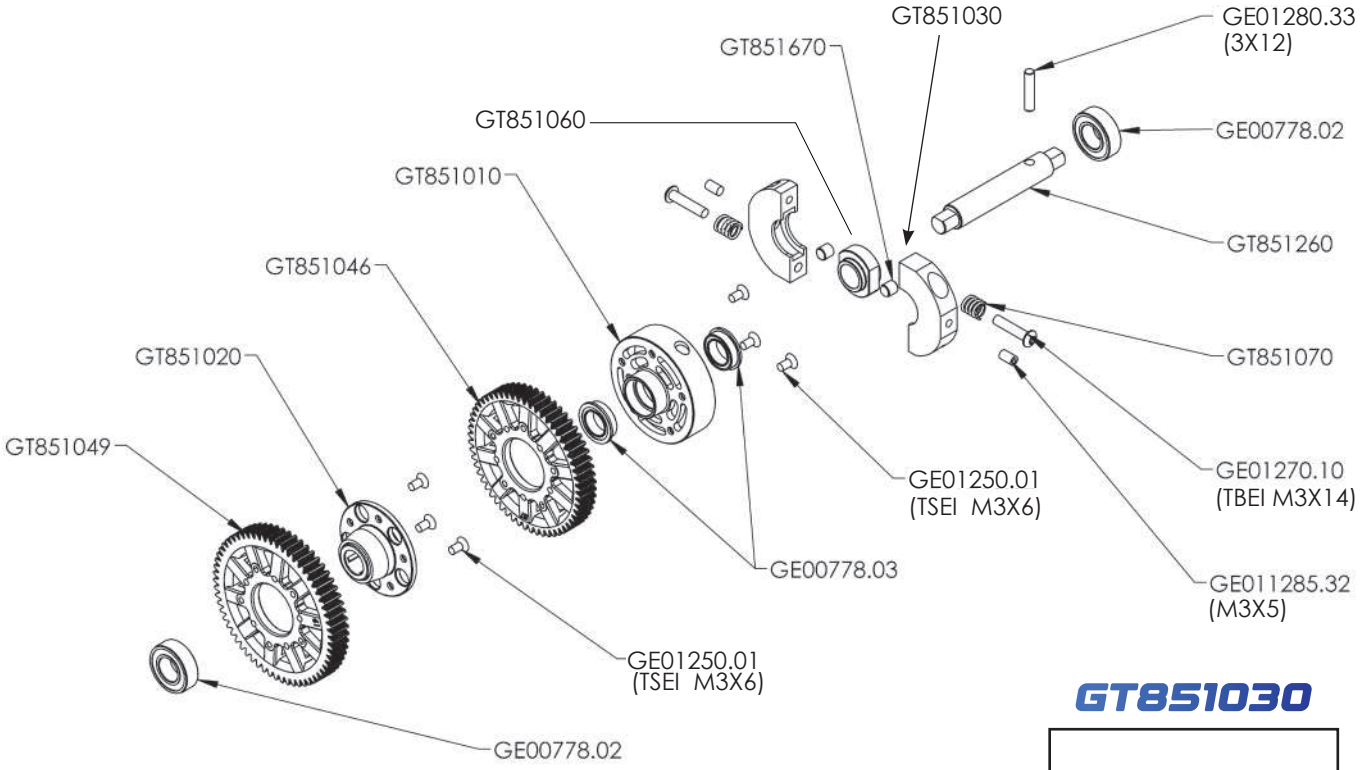

GT851030

2-SPEED GEAR BOX		
TYPE	TEETH	RS LINE
1st GEAR	48T	GT851048
	49T	GT851049
	50T	GT851050
2nd GEAR	45T	GT851045
	46T	GT851046
	47T	GT851047

GTC8.25

NITRO

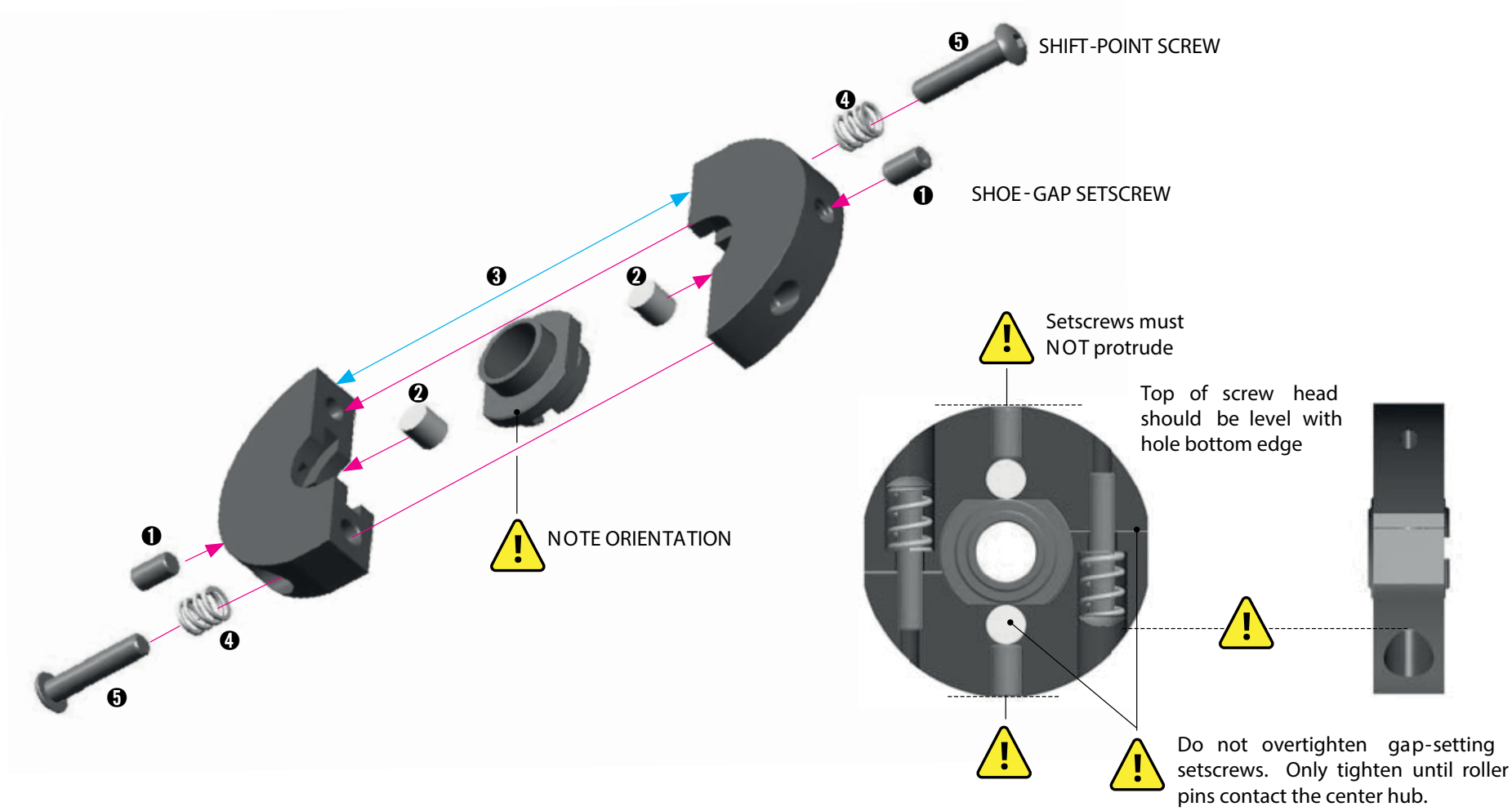
❺ SHIFT-POINT SCREW
❹
❶ SHOE-GAP SETSCREW
❸
❷
❷
❶
❹
❺
NOTE ORIENTATION
Setscrews must NOT protrude
Top of screw head should be level with hole bottom edge
Do not overtighten gap-setting setscrews. Only tighten until roller pins contact the center hub.

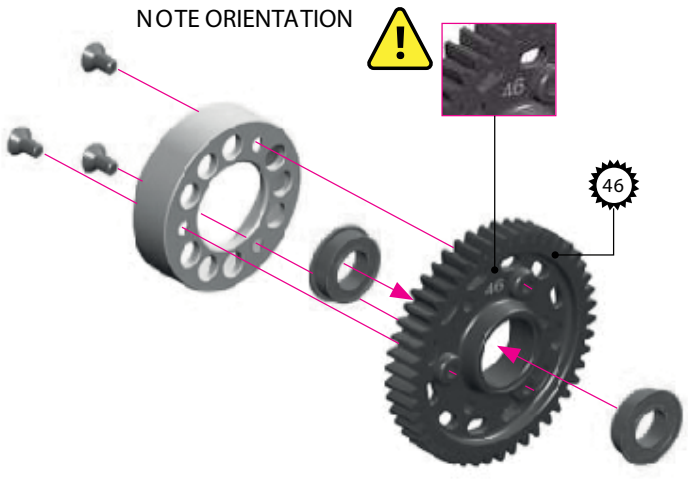
NOTE ORIENTATION
46

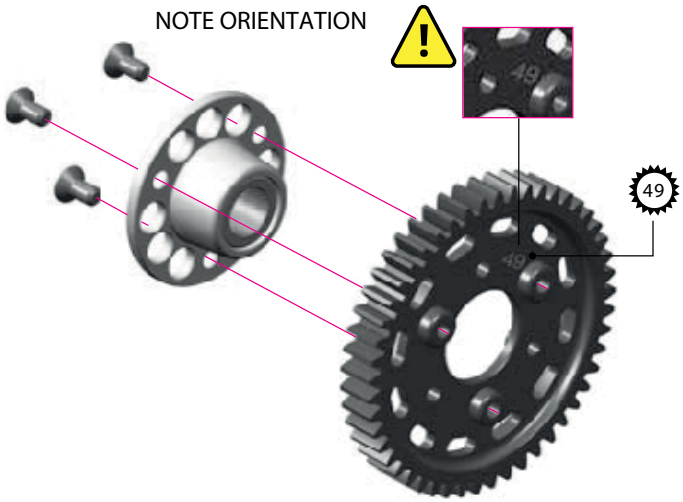
NOTE ORIENTATION
49

9. CENTER SOLID SHAFT & BRAKE

GTC8.25

NITRO

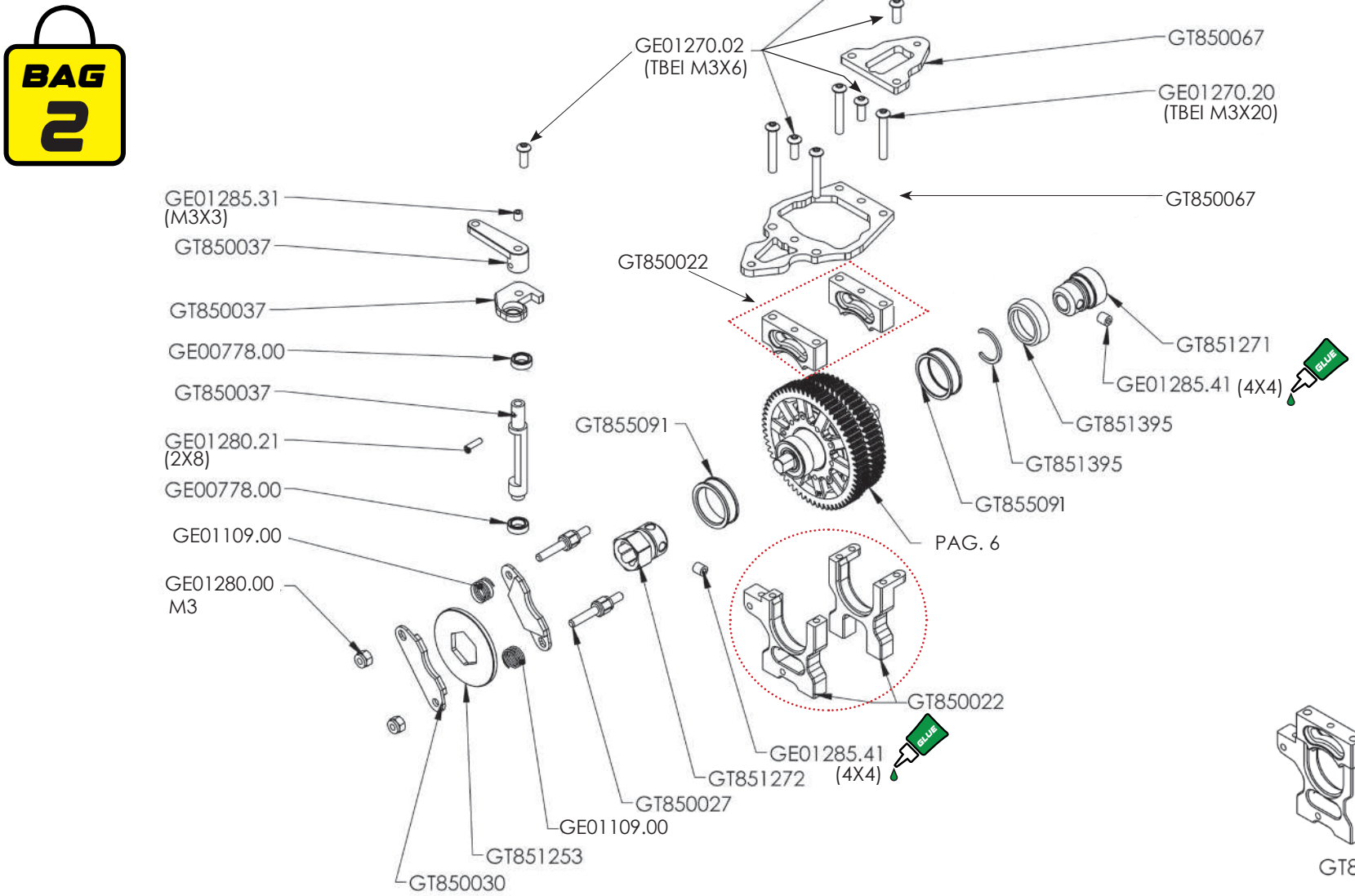

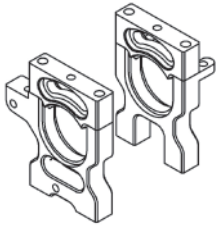

10. CENTER MOUNT & MOTOR

GTC8.25

ECO

BAG 11

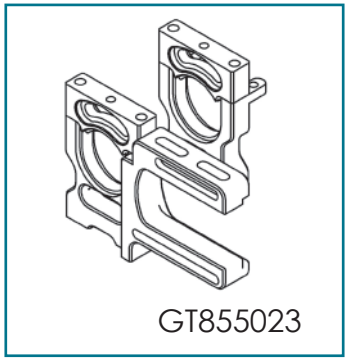

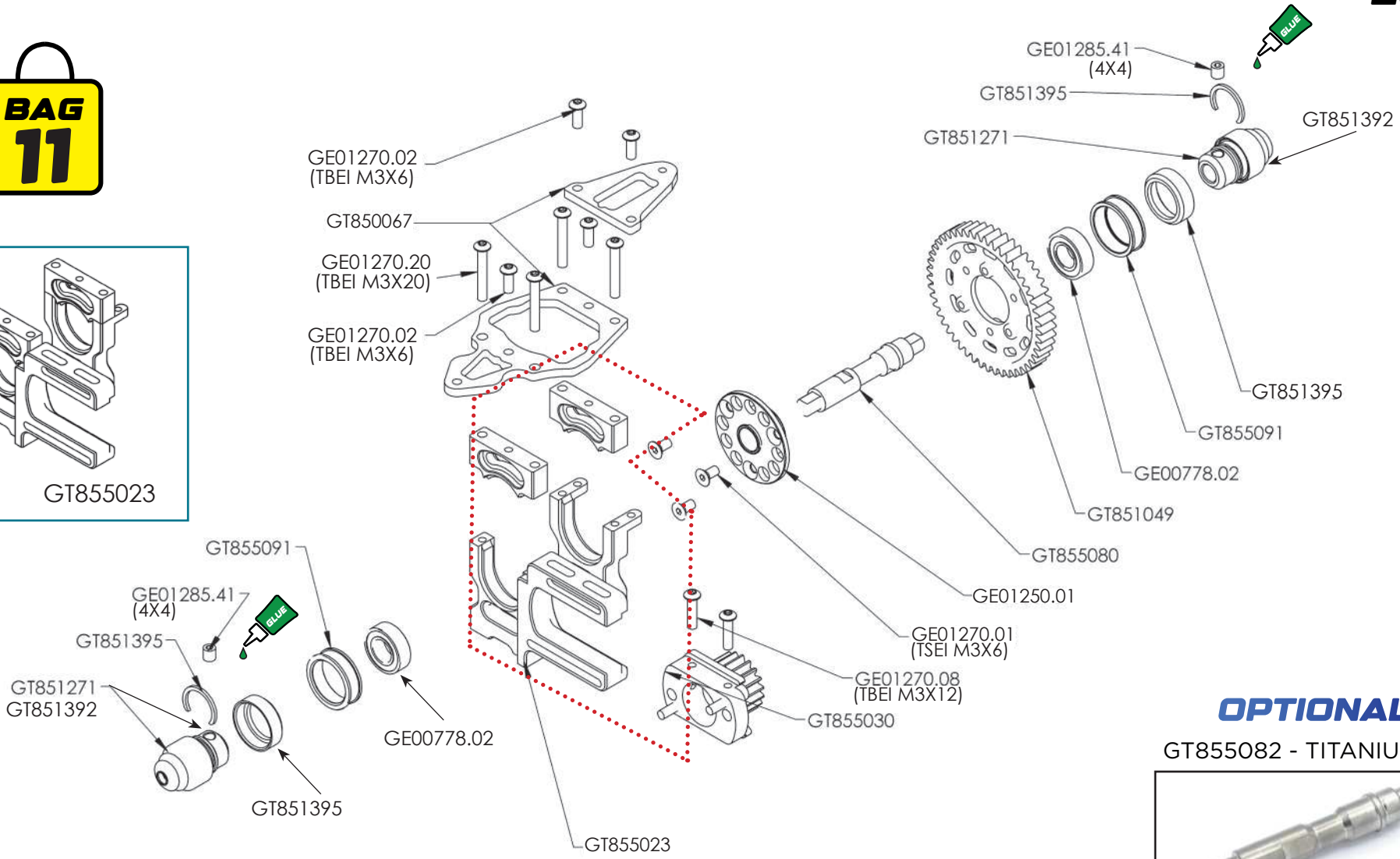

OPTIONAL

GT855082 - TITANIUM 9gr

11. CENTER SOLID SHAFT & BRAKE

GTC8.25

NITRO

BAG 2

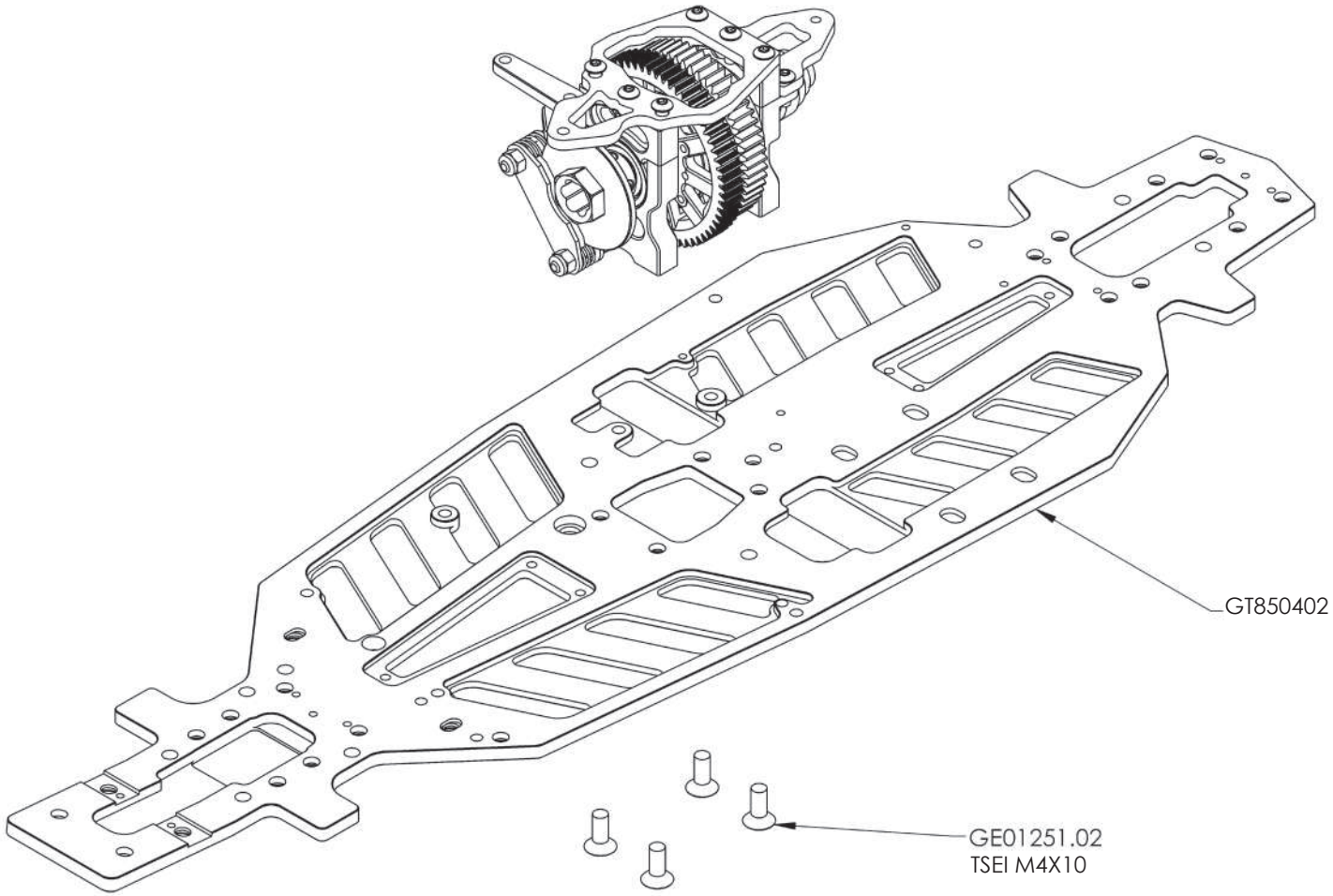

12. CENTER SOLID SHAFT & MOTOR

ECO

BAG 11

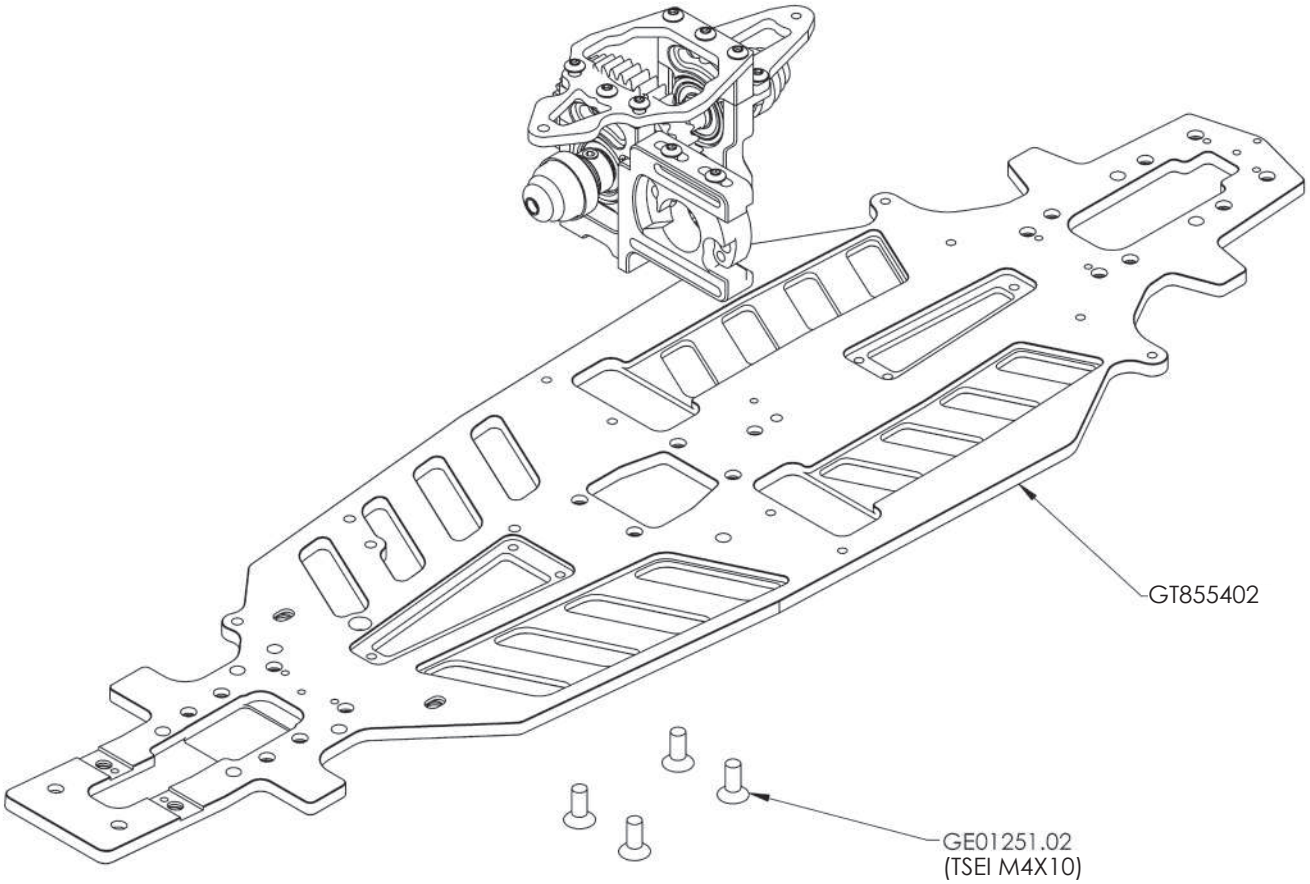

13. REAR ASSEMBLING

GTC8.25

NITRO + ECO

BAG 3

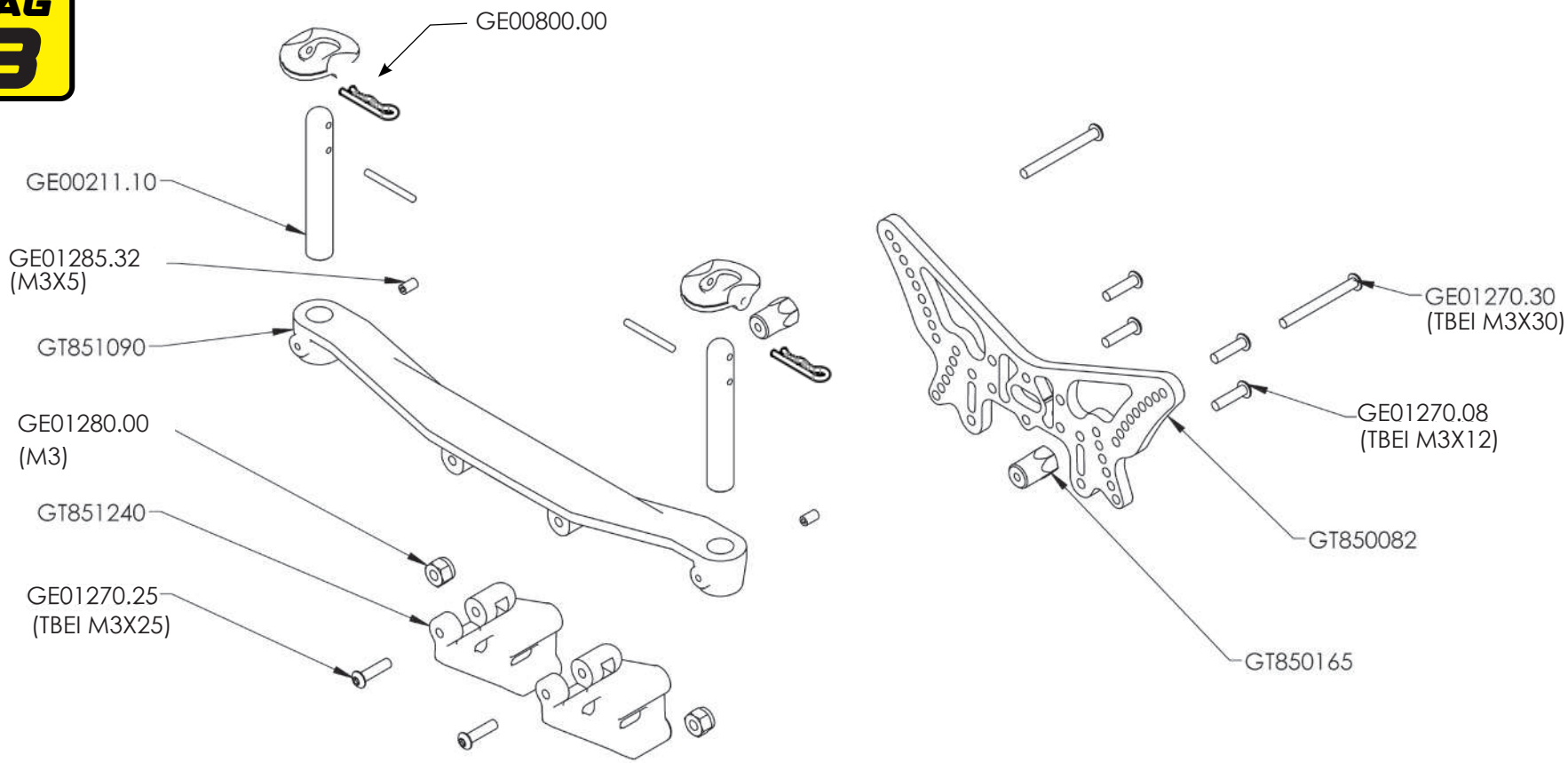

14. REAR BULKHEAD

GTC8.25

NITRO + ECO

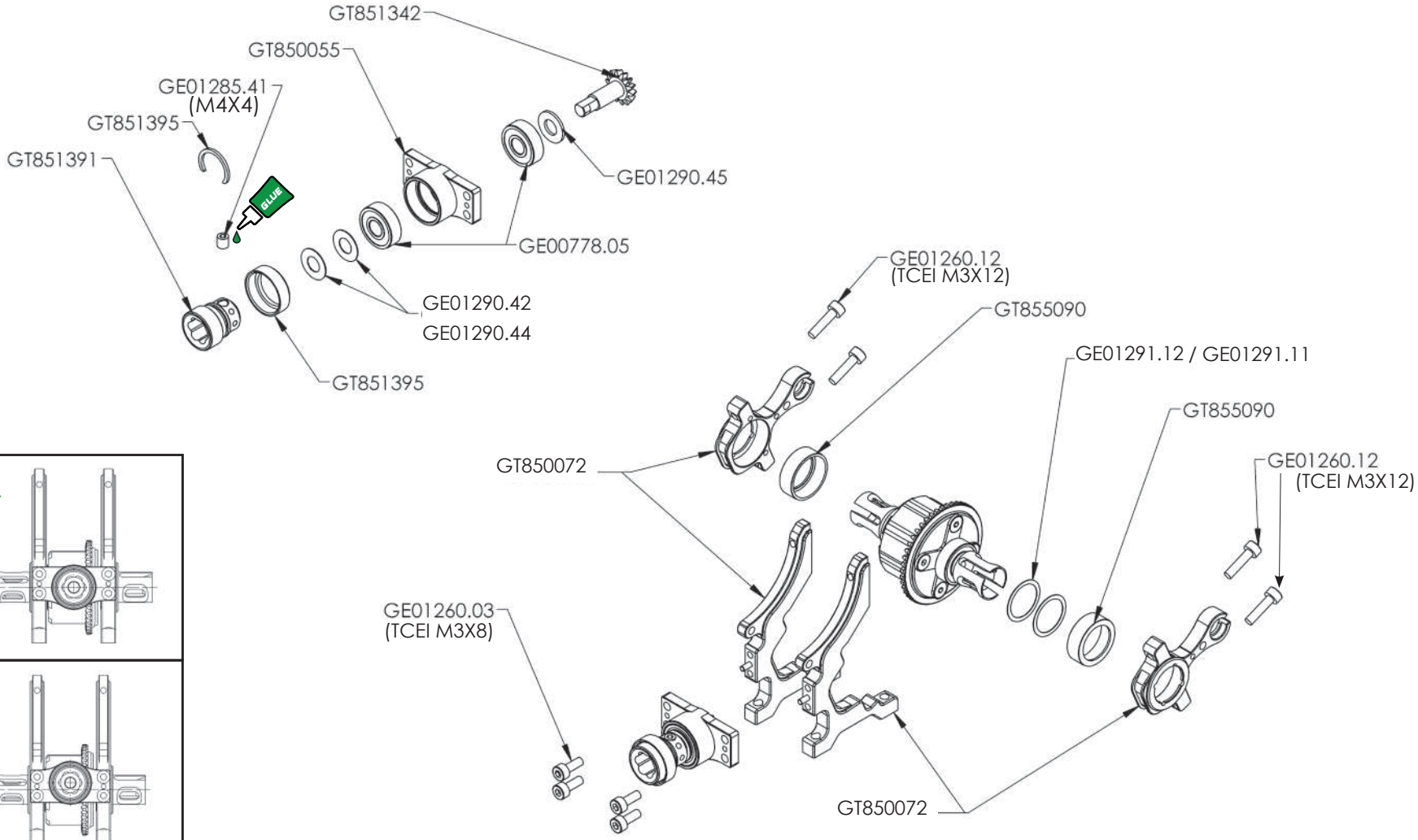

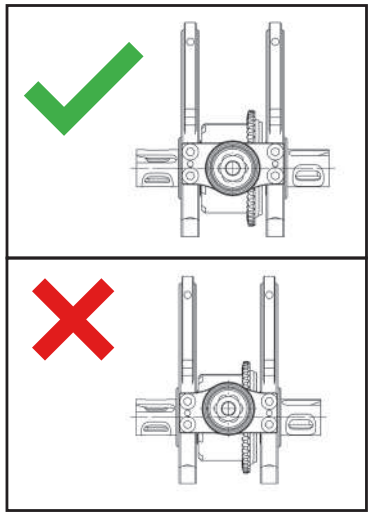

15. REAR BALL DRIVE SHAFT

GTC8.25

NITRO

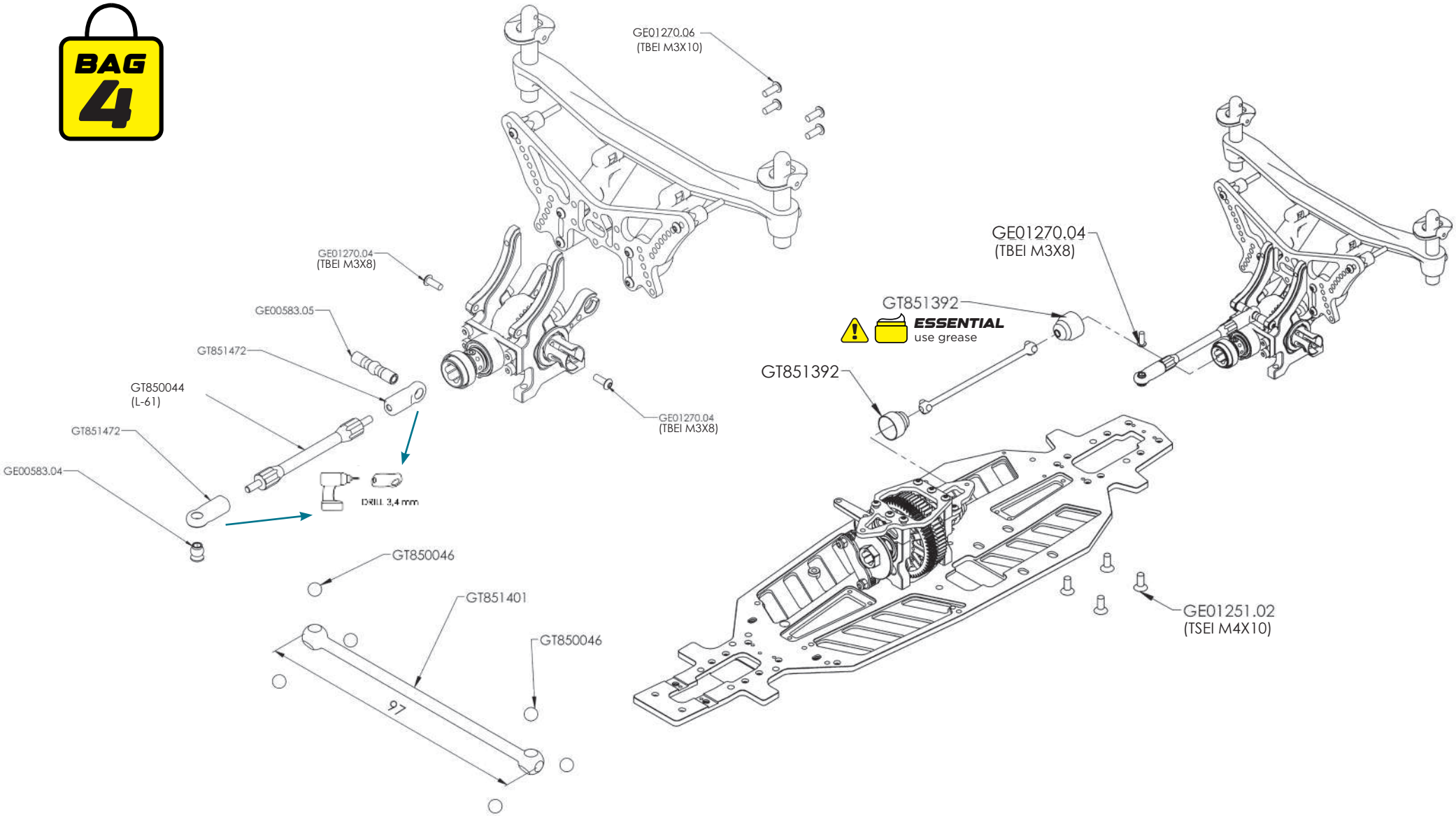

16. REAR BALL DRIVE SHAFT

GTC8.25

ECO

BAG 13

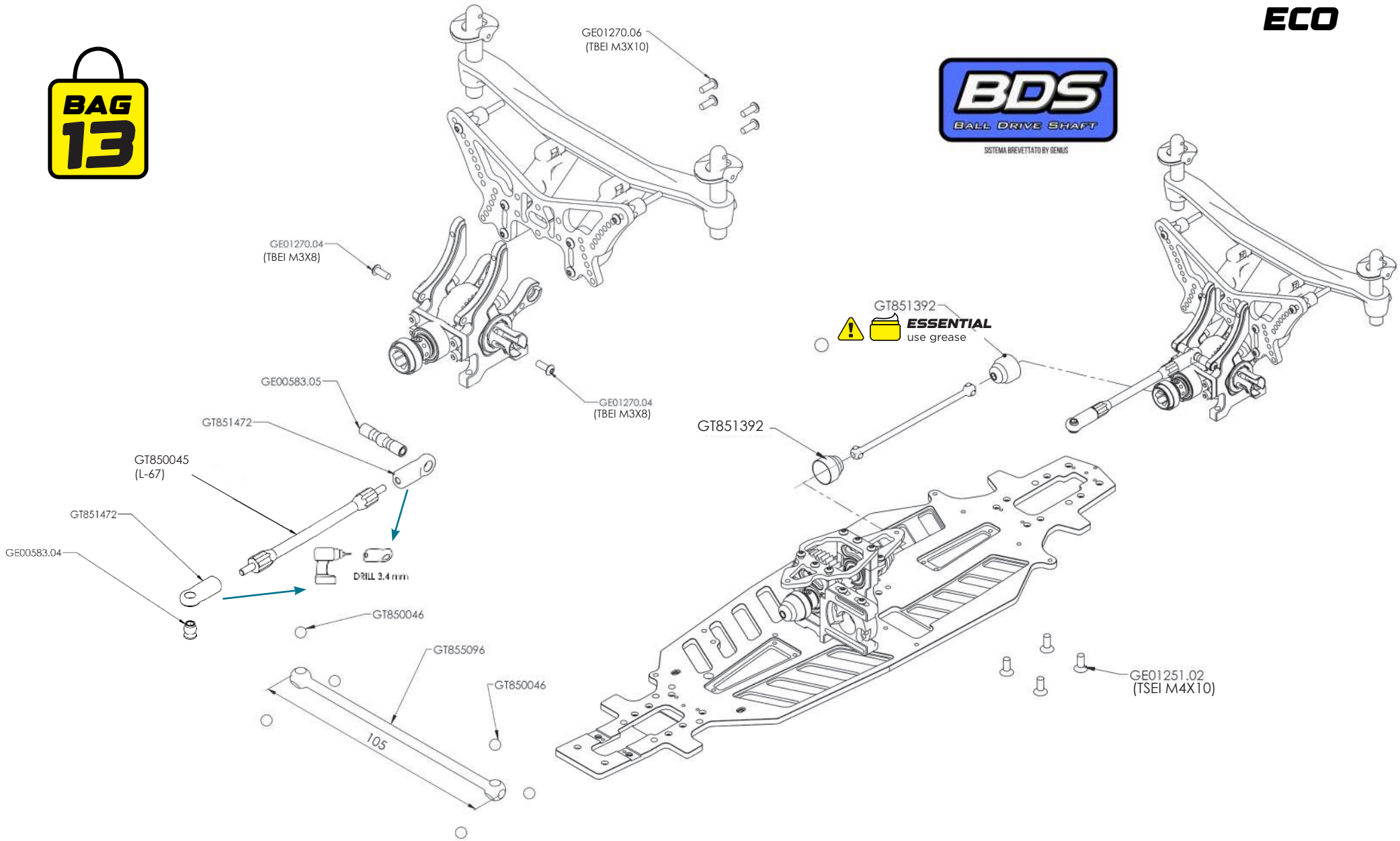

17. REAR REINFORCEMENT BRACE

GTC8.25

NITRO + ECO

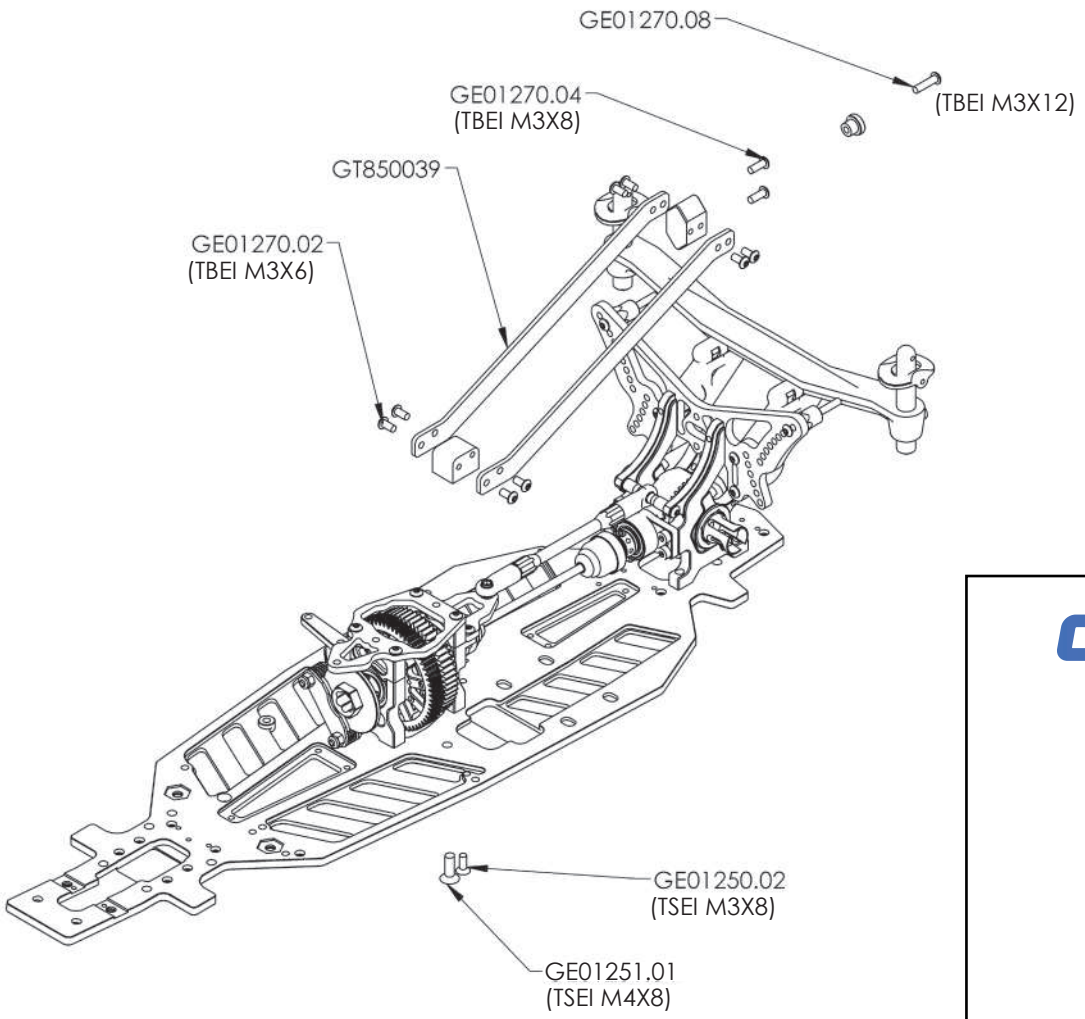

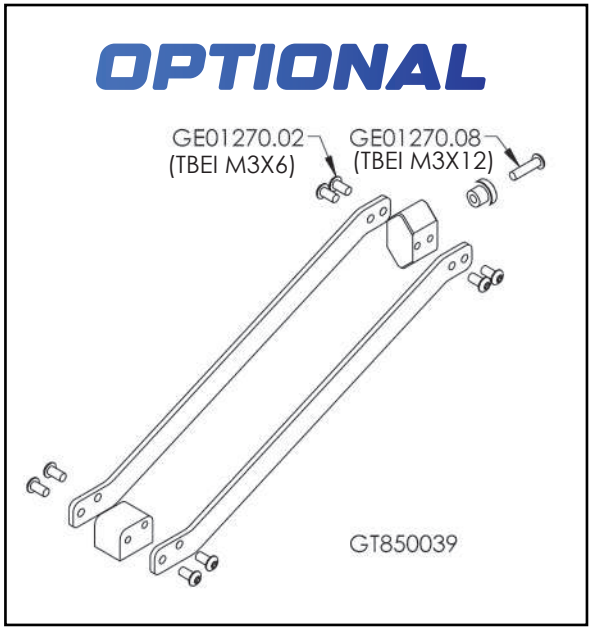

18. FRONT BULKHEAD

GTC8.25

NITRO + ECO

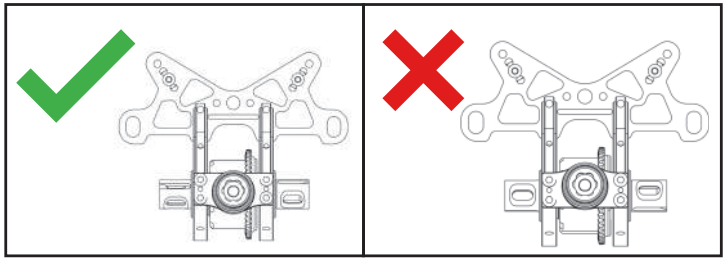

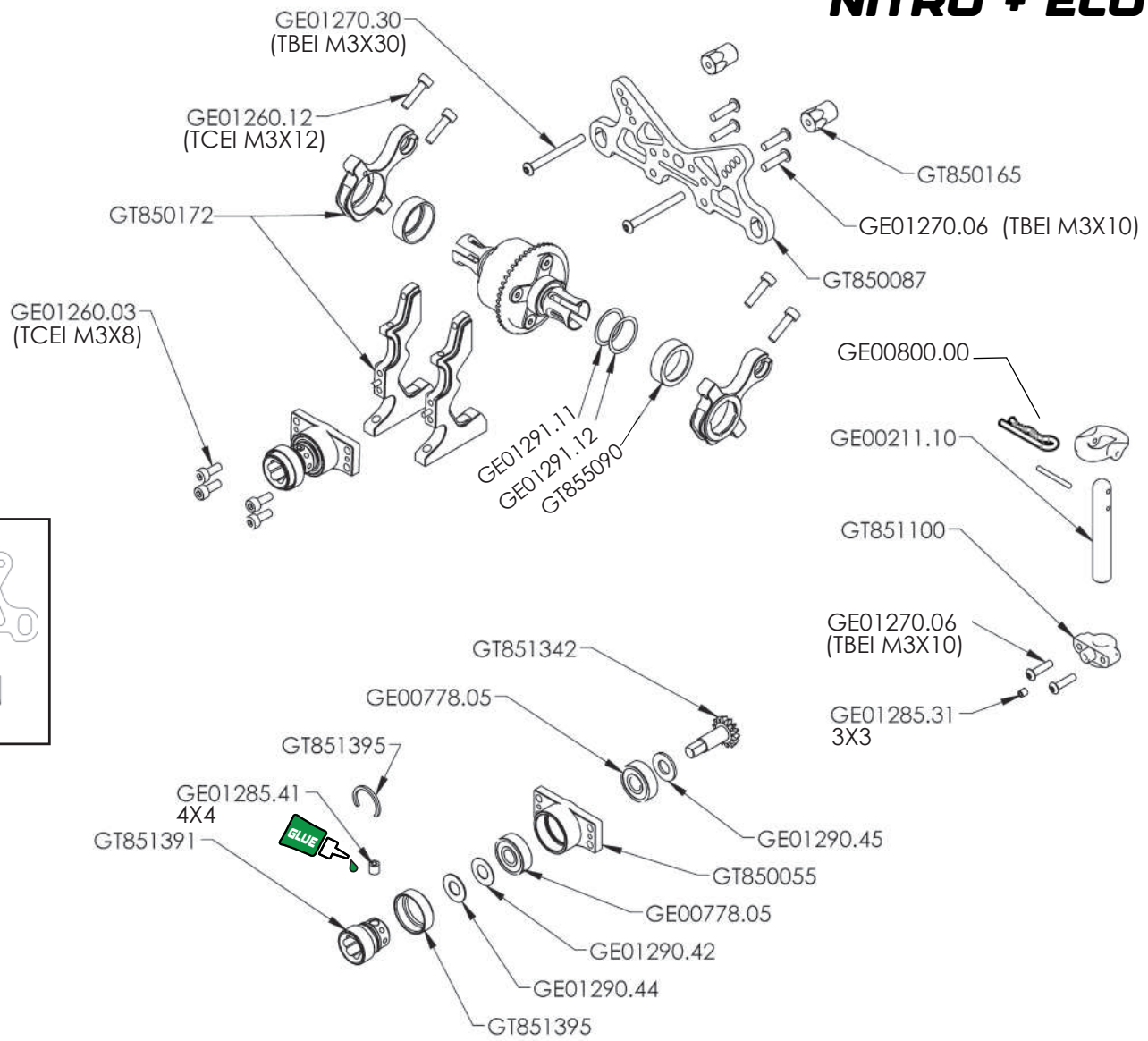

19. FRONT BALL DRIVE

GTC8.25

NITRO + ECO

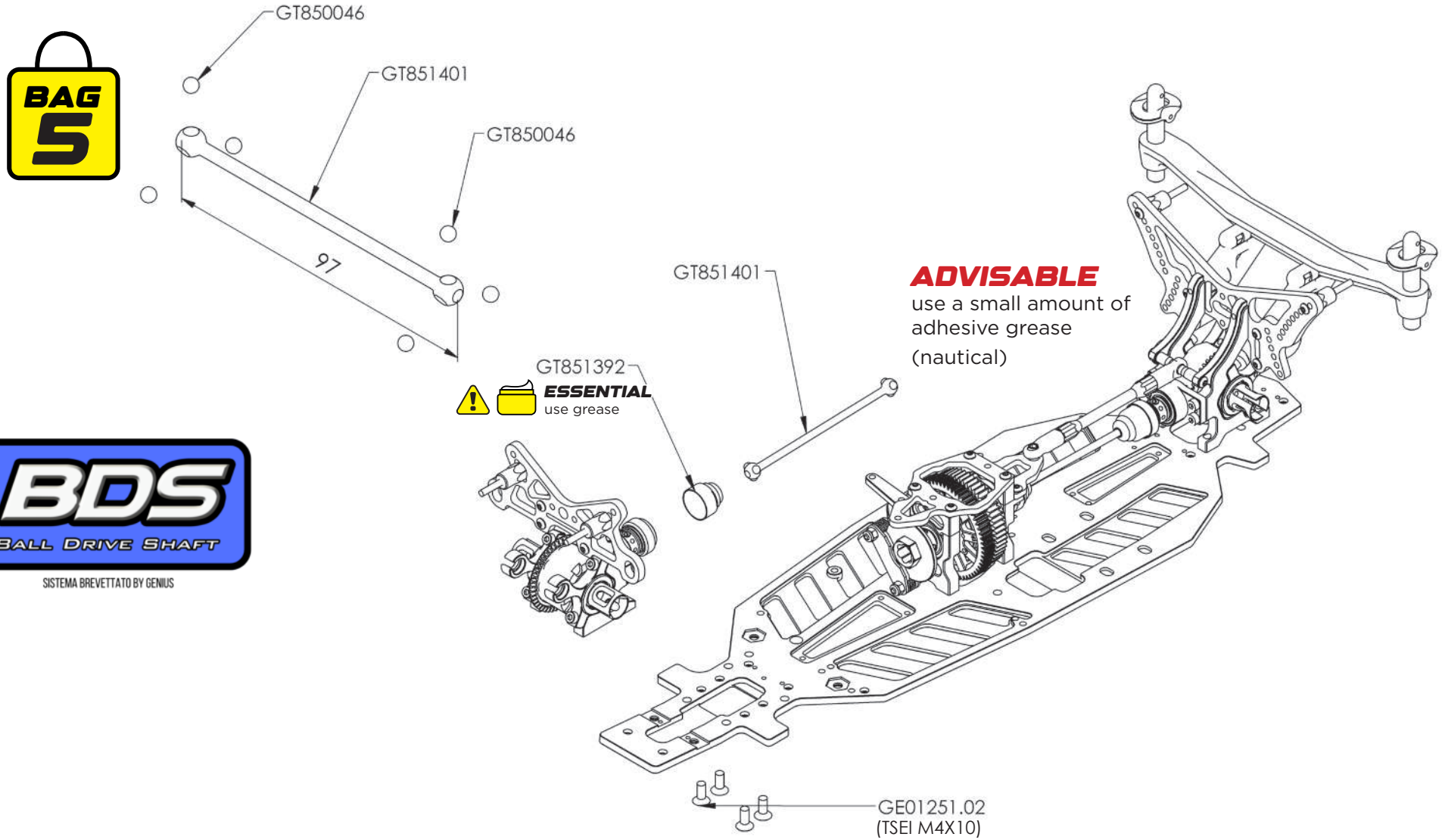

BDS
BALL DRIVE SHAFT
SISTEMA BREVETTATO BY GENIUS

20. LOWER SUSPENSION ARM REAR

GTC8.25

NITRO + ECO

BAG 7

LEFT SIDE

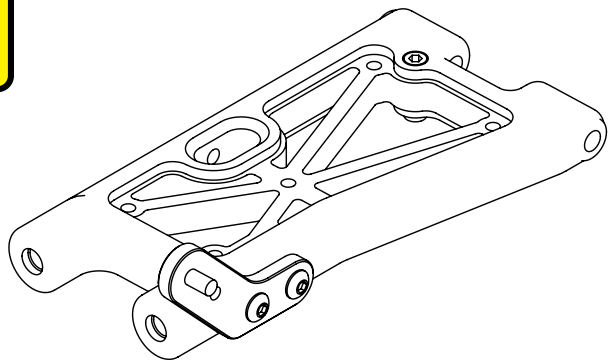

RIGHT SIDE

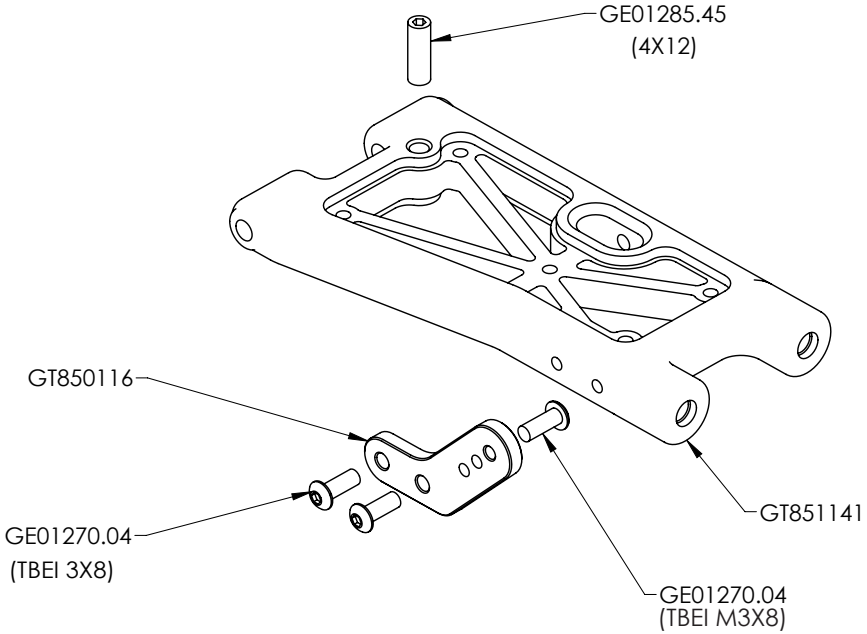

OPTION	OPTION	OPTION
GRAPHITE INSERT REAR LOWER ARM	GRAPHITE SHOCK EXTENTION	ALU REAR LOWER SUSPENSION ARM
GT851142	GT850117	GT851135
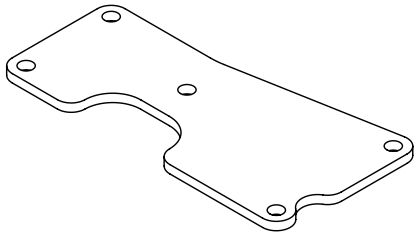	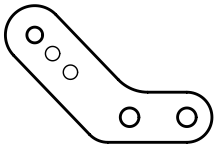	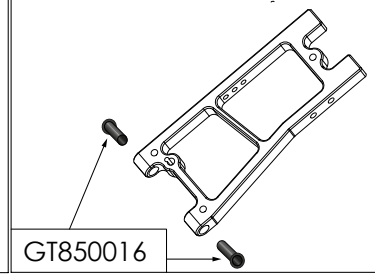 GT850016

21. REAR UPRIGHT

GTC8.25

NITRO + ECO

BAG 7

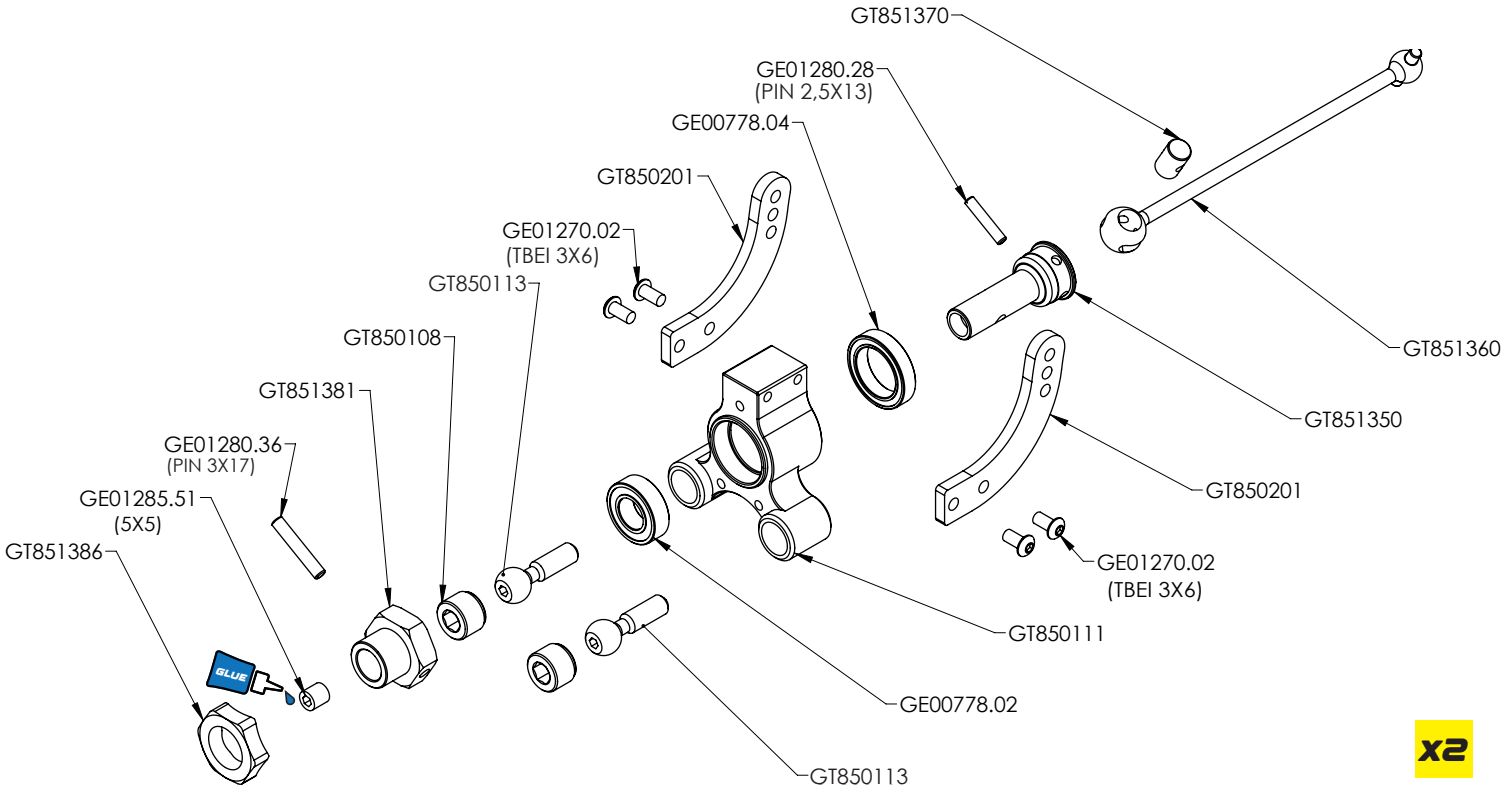

x2

OPTION

OPTION
ALUMINIUM
GT851351

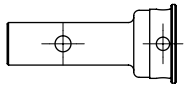

WISHBONE ERGAL REAR		WISHBONE PLASTIC REAR	
STEEL	TITAN	STEEL	TITAN
23,5 mm	23,5 mm	28,5 mm	28,5 mm
GT850109	GT850112	GT850113	GT850114

OPTIONS		
GT851381	GT851382	GT851383
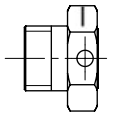	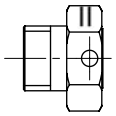	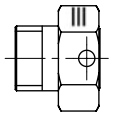
+1	+2	+3

22. REAR ROLLBAR ARMS

GTC8.25

NITRO + ECO

BAG 7

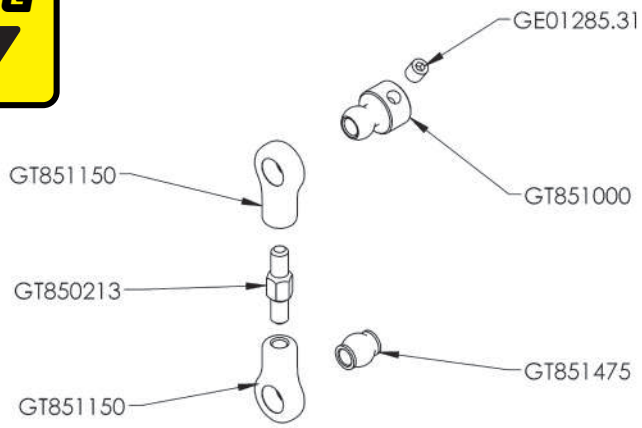

OPTION

ALU - GT850215

TITAN - GT850214

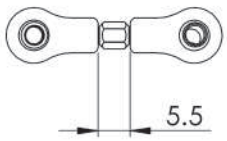

STANDARD SETTING

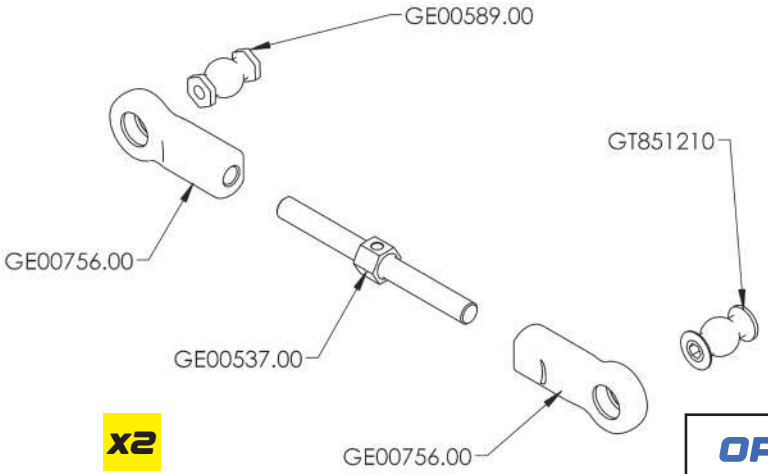

x2

OPTION

GE00537.01

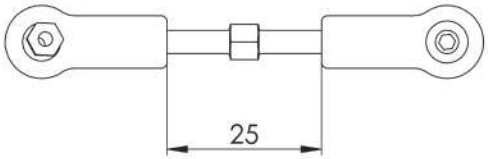

STANDARD SETTING

23. REAR UPRIGHT & ARMS

GTC8.25

NITRO + ECO

BAG 7

LEFT SIDE

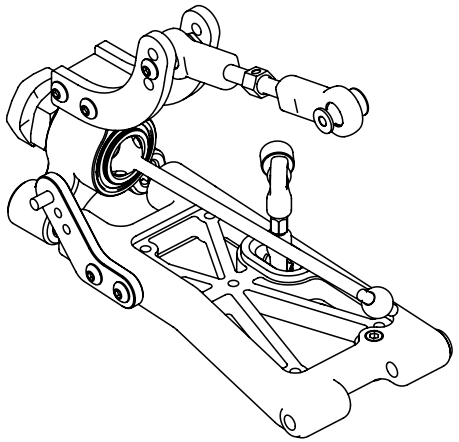

RIGHT SIDE

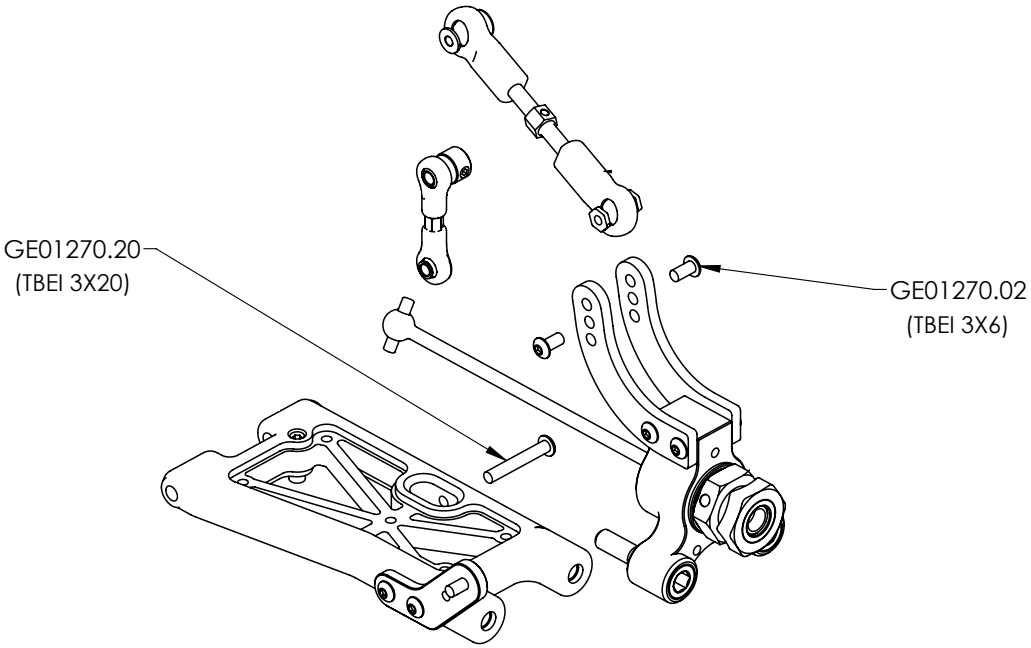

24. REAR ANTI ROLL BAR

GTC8.25

NITRO + ECO

BAG 7

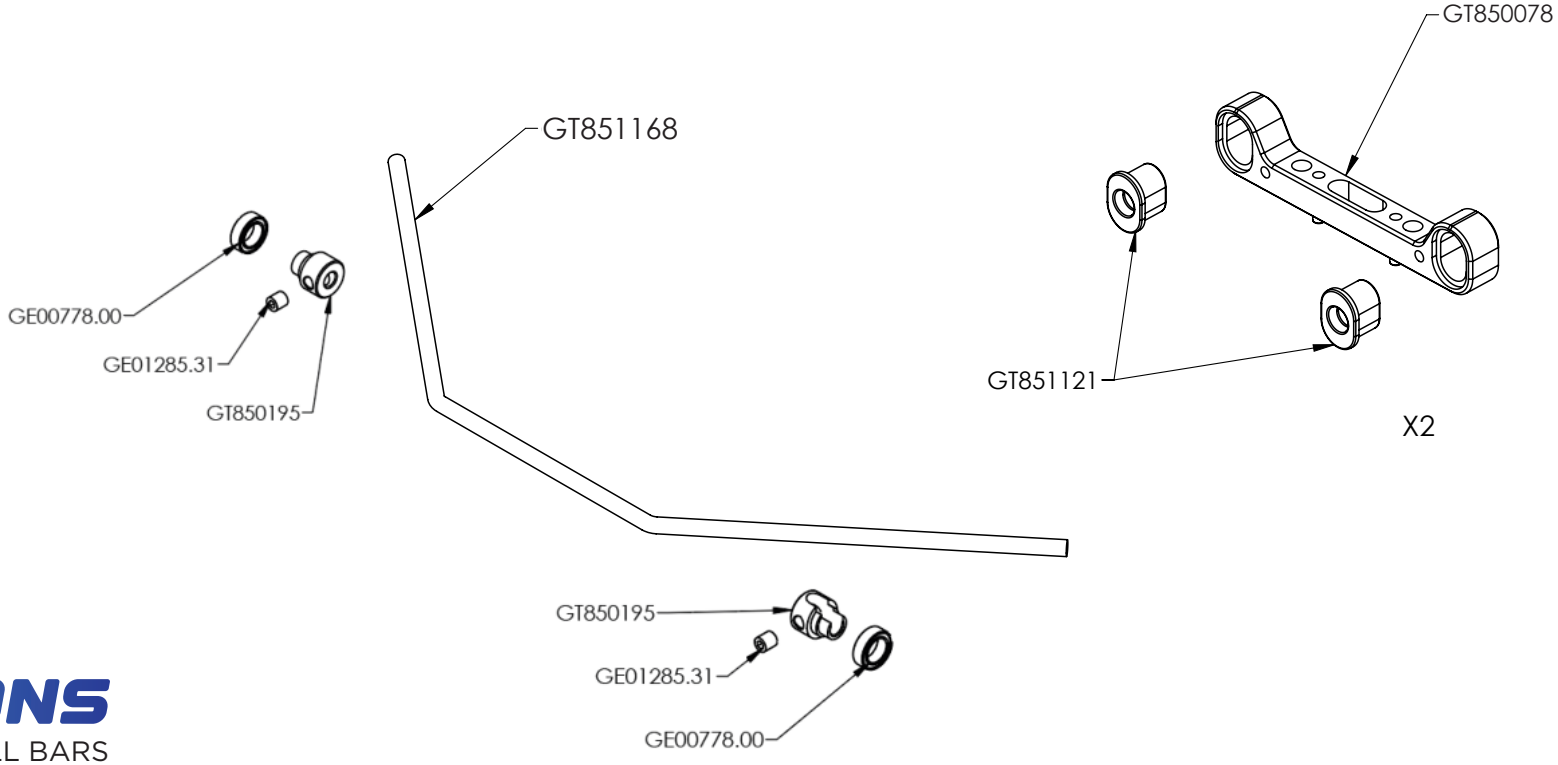

OPTIONS

REAR ANTI ROLL BARS

GT851166	Ø 2,6 mm
GT851167	Ø 2,7 mm
GT851168	Ø 2,8 mm
GT851169	Ø 2,9 mm
GT851170	Ø 3.0 mm
GT851171	Ø 3.1 mm
GT851172	Ø 3.2 mm

SET GT851121	
X4 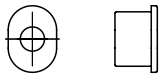	0
X4 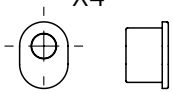	+1.5

25. REAR ASSEMBLING

GTC8.25

NITRO + ECO

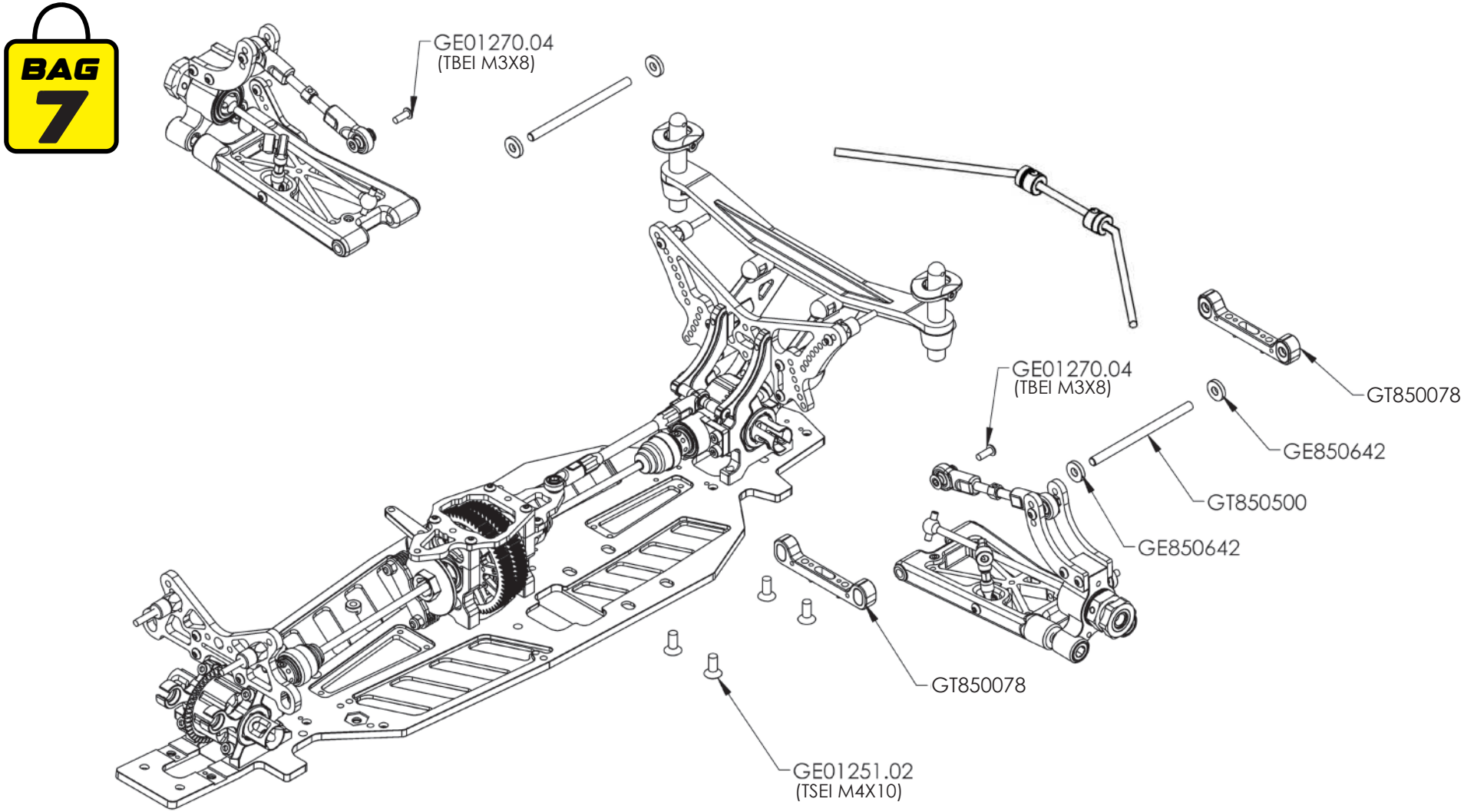

26. LOWER SUSPENSION ARMS FRONT

GTC8.25

NITRO + ECO

BAG 8

LEFT SIDE

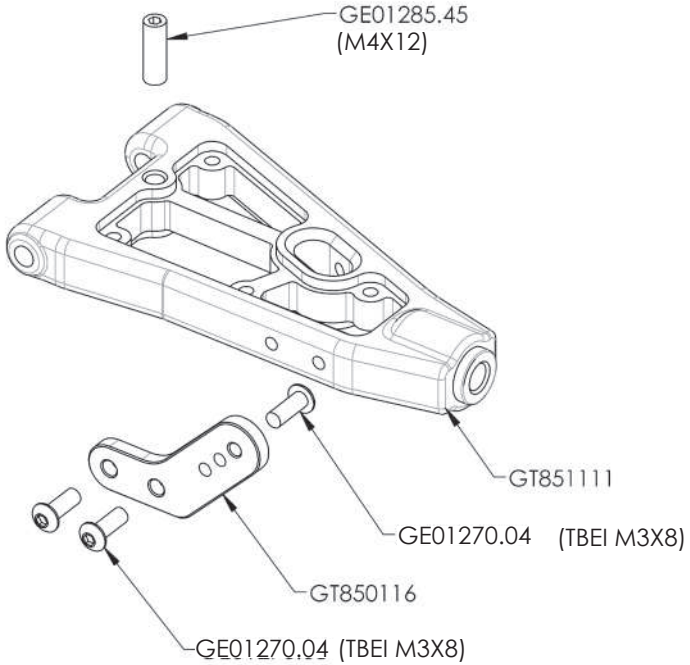

RIGHT SIDE

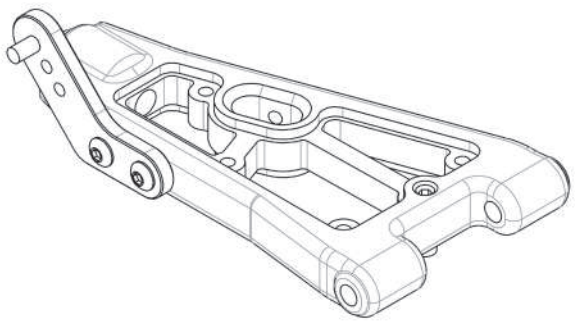

OPTIONS	OPTIONS	OPTIONS
GRAPHITE INSERT FRONT LOWER ARM	GRAPHITE SHOCK EXTENTION	ALU FRONT LOWER SUSPENSION ARM
GT851112	GT850117	GT851109
		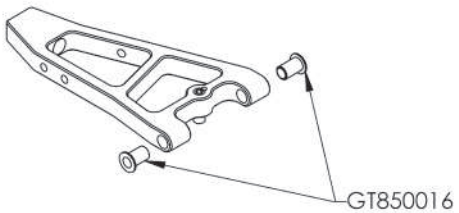

27. FRONT ANTI ROLL BAR

GTC8.25

NITRO + ECO

BAG 8

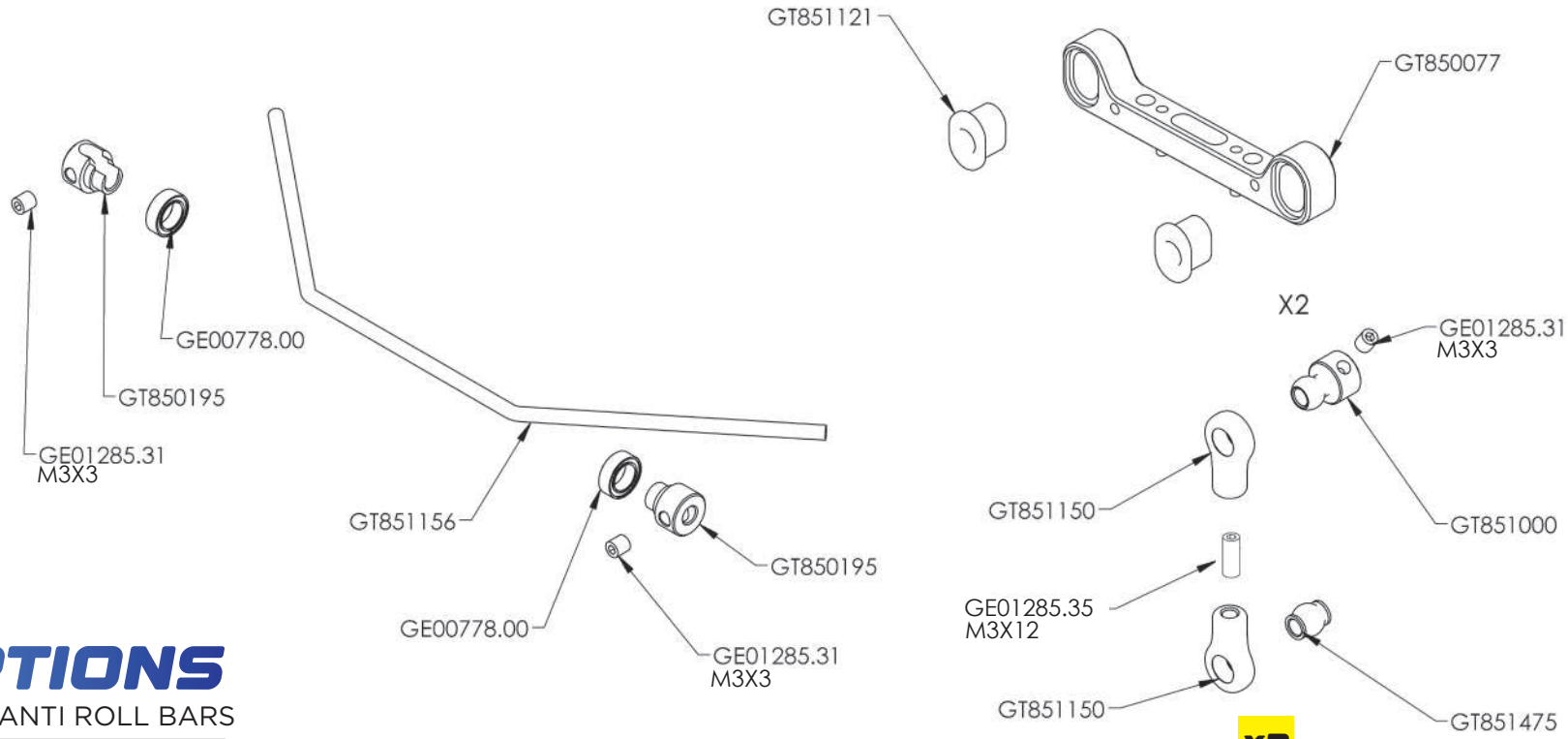

OPTIONS

FRONT ANTI ROLL BARS

GT851154	Ø 2,4 mm
GT851155	Ø 2,5 mm
GT851156	Ø 2,6 mm
GT851157	Ø 2,7 mm
GT851158	Ø 2.8 mm
GT851159	Ø 2.9 mm
GT851160	Ø 3.0 mm

OPTION

ALU - GT850215
TITAN - GT850214

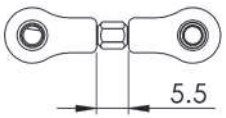

STANDARD SETTING

X2

X4	0
X4	+1.5

SET
GT851521

28. FRONT UPRIGHT

NITRO + ECO

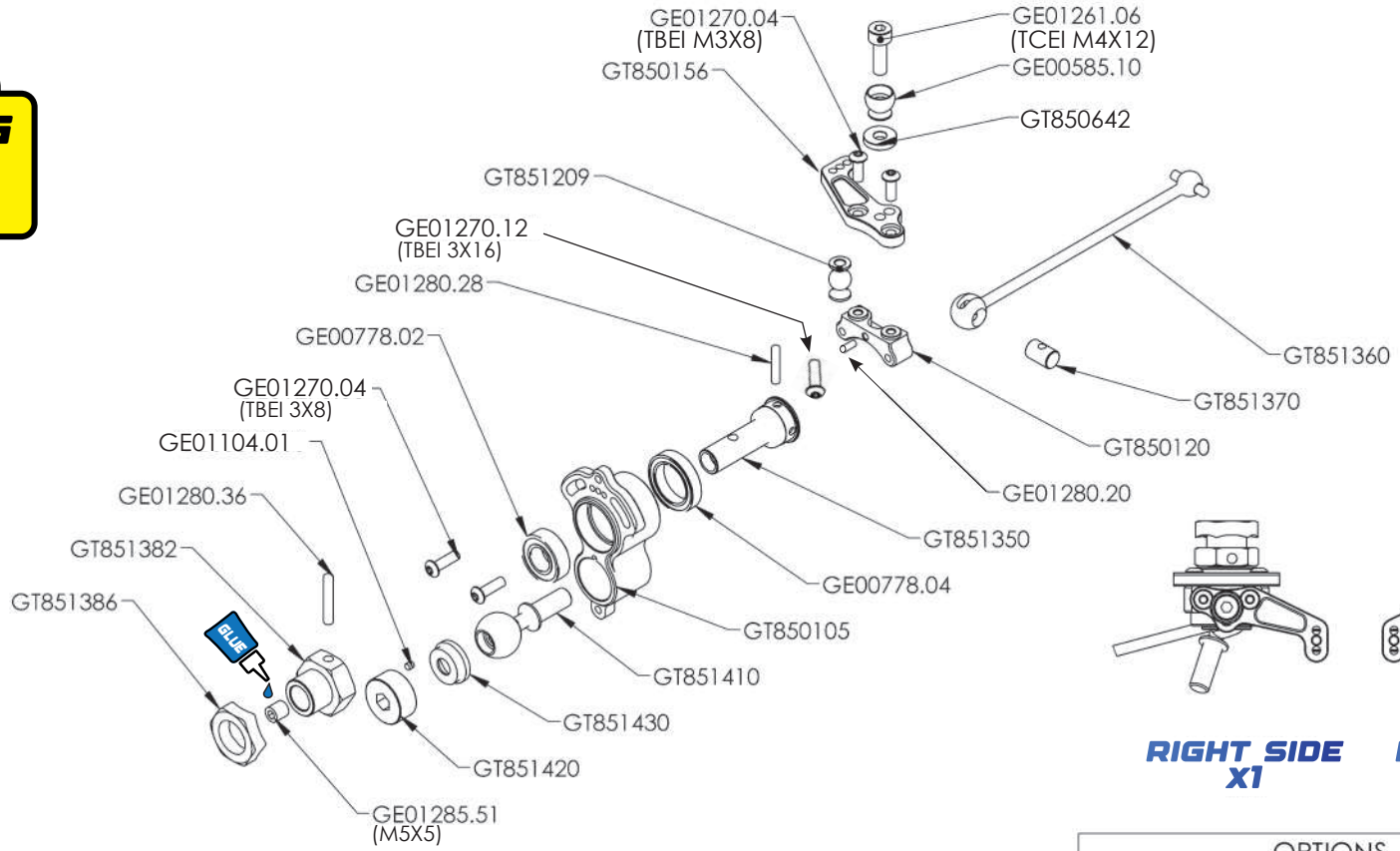

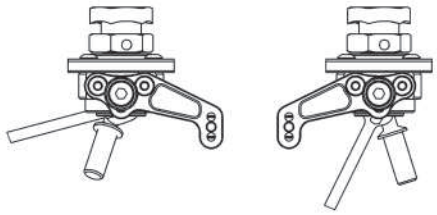

RIGHT SIDE X1 **LEFT SIDE X1**

OPTION ALUMINUM

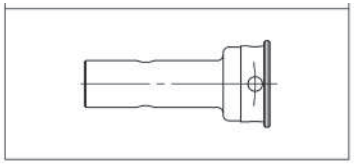

GT851351

OPTIONS		
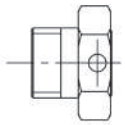	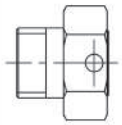	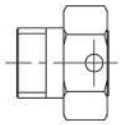
+1	+2	+3
GT851381	GT851382	GT851383

29. LOWER SUSPENSION ARM FRONT MOUNTING

GTC8.25

NITRO + ECO

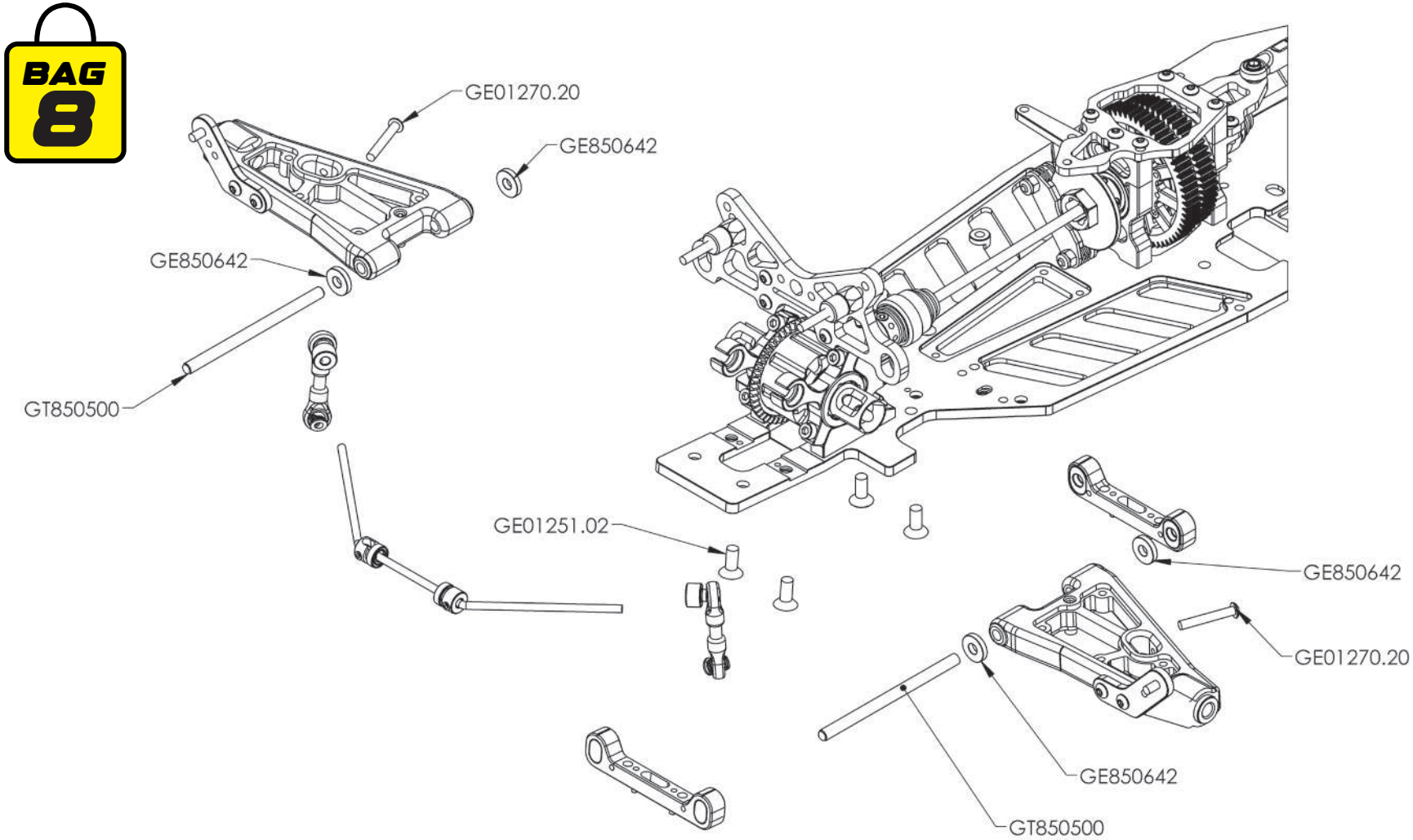

30. ASSEMBLING FRONT UP ARMS

GTC8.25

NITRO + ECO

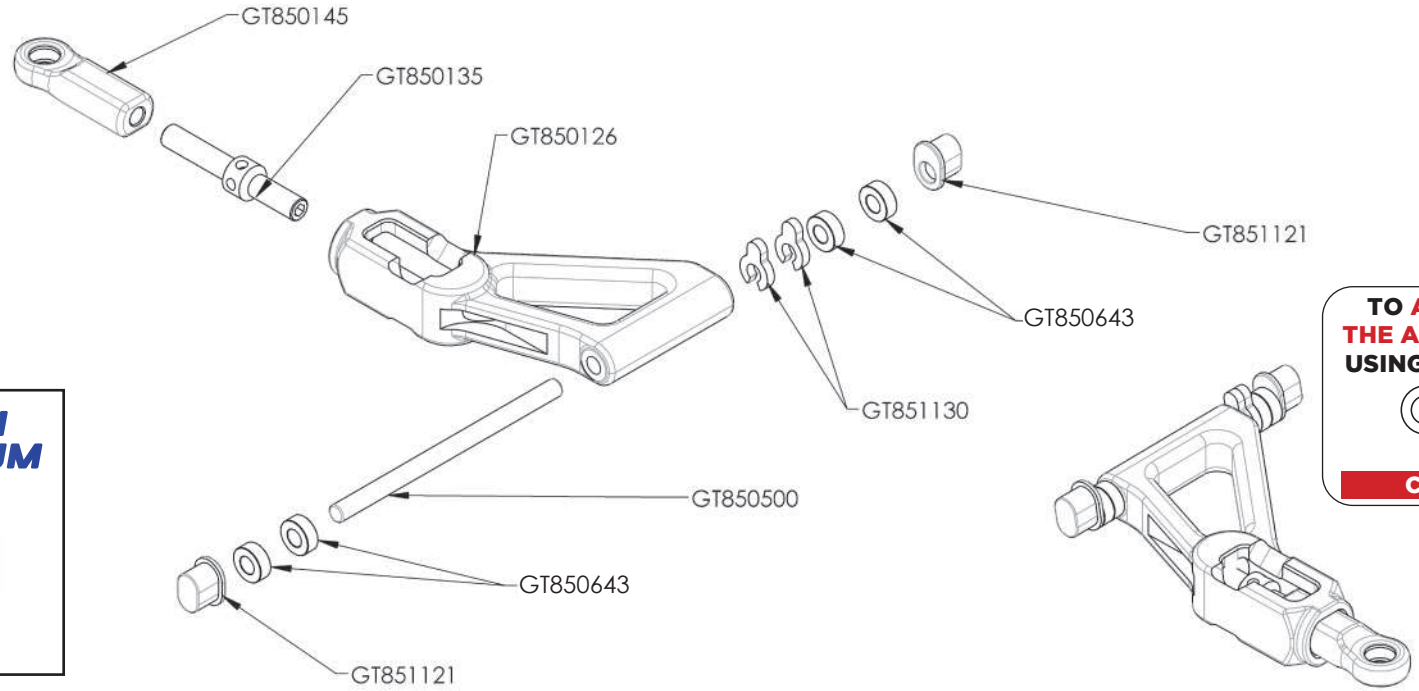

OPTION ALUMINUM
GT850136

TO ADJUST THE PLAY IN THE ARM WE RACCOMMEND USING THE SUPPLIED SHIMS

4X8X0,5

CODE: GE01290.24

X2

GT851130	
SPACERS SET	
2mm	1mm

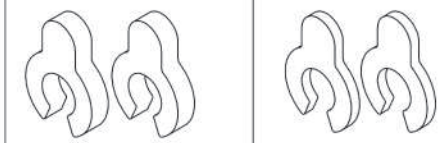

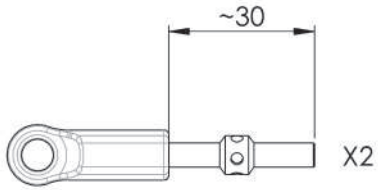

PREMOUNTING SET

SET GT851121	
X4	0
X4 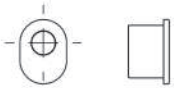	+1.5

GTC8.25

NITRO + ECO

BAG 6

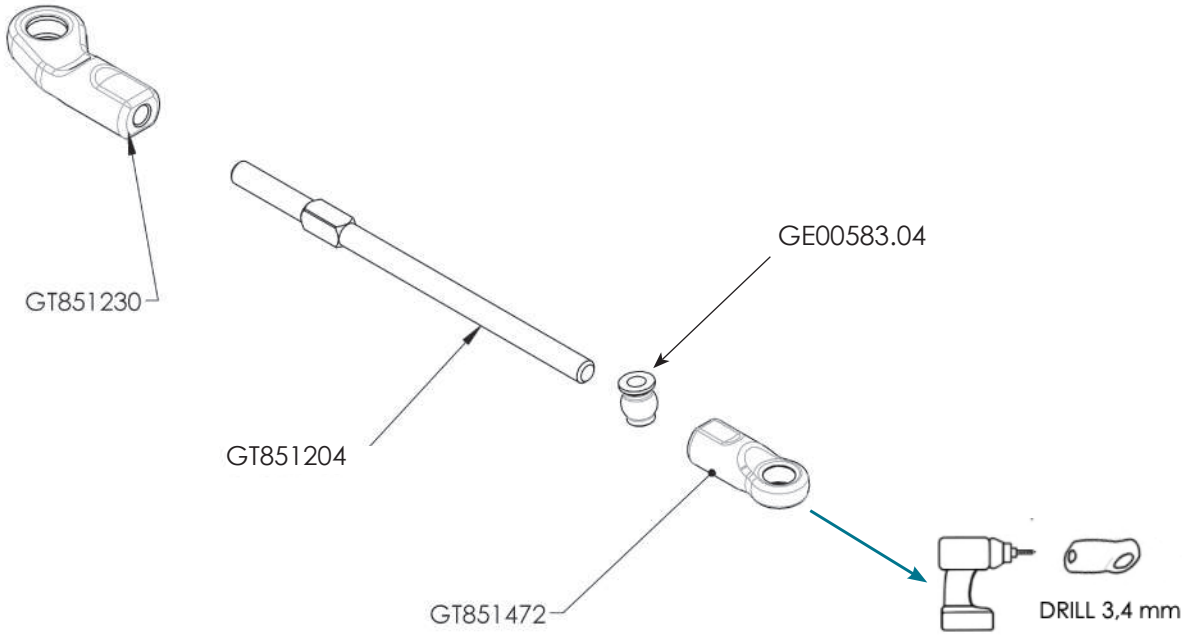

GT851204

ADJ. TURNBUNKLE M4 L/R
81 MM EXA 4 (2)

GT851205

ADJ. TURNBUNKLE ALU M4 L/R
81 MM EXA 4 (2)

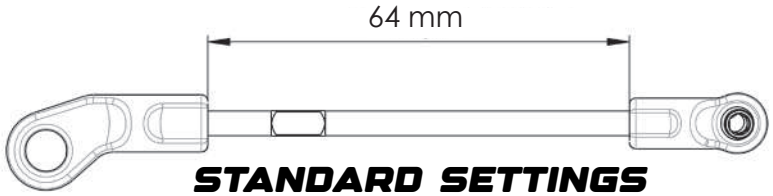

STANDARD SETTINGS

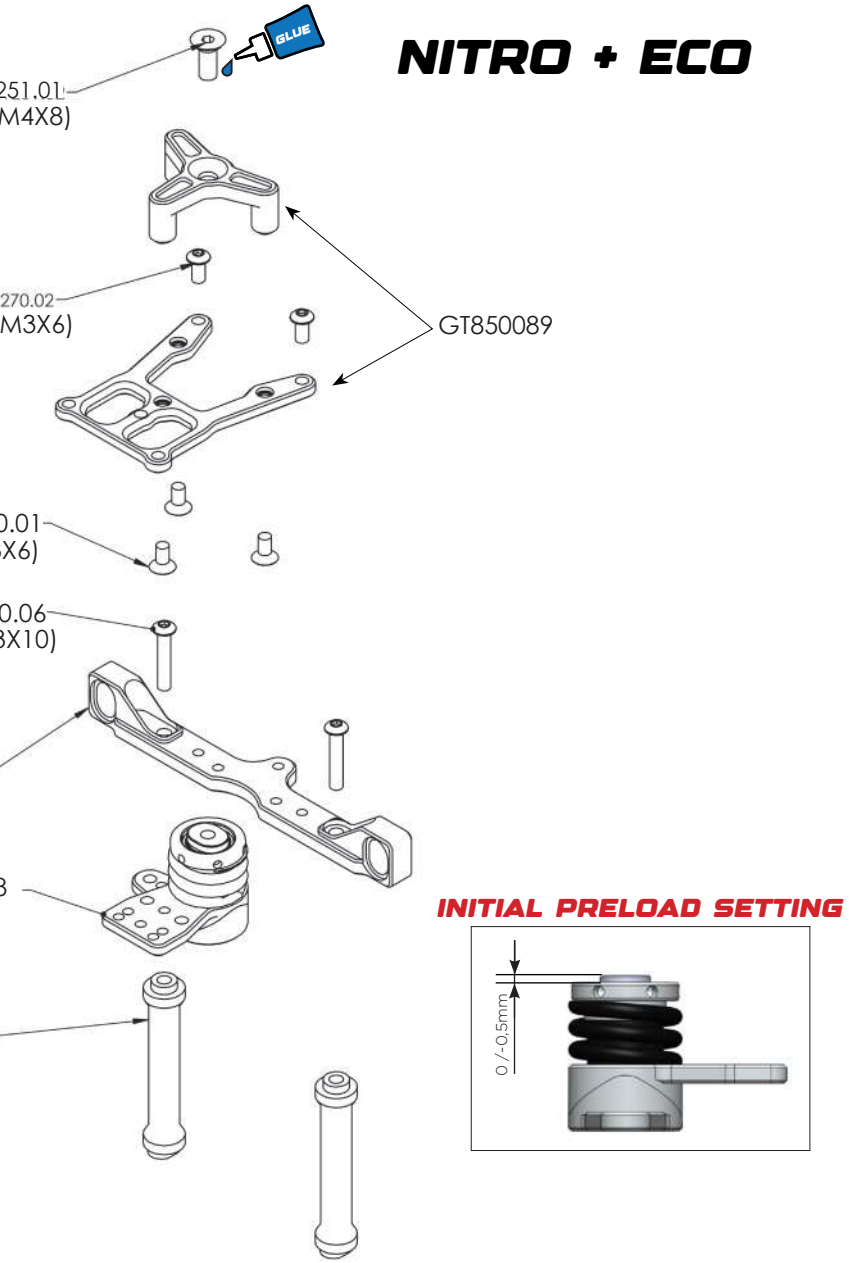

BAG 6

GT851178

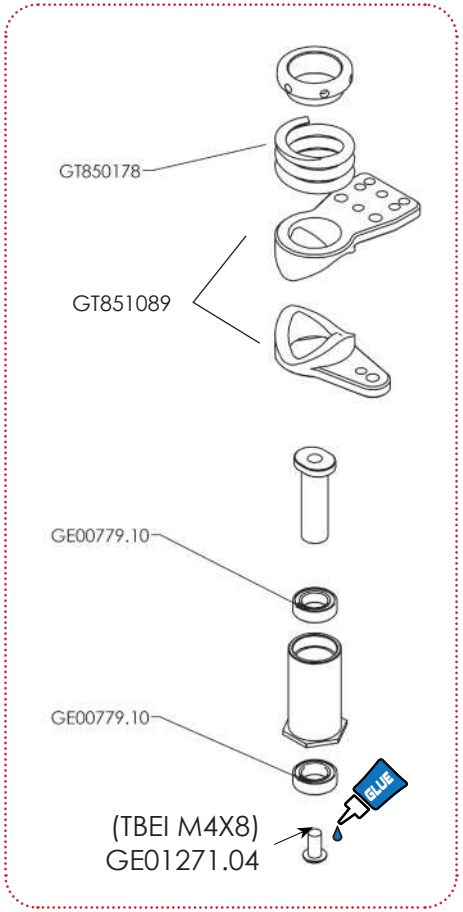

33. FRONT ASSEMBLING

GTC8.25

NITRO + ECO

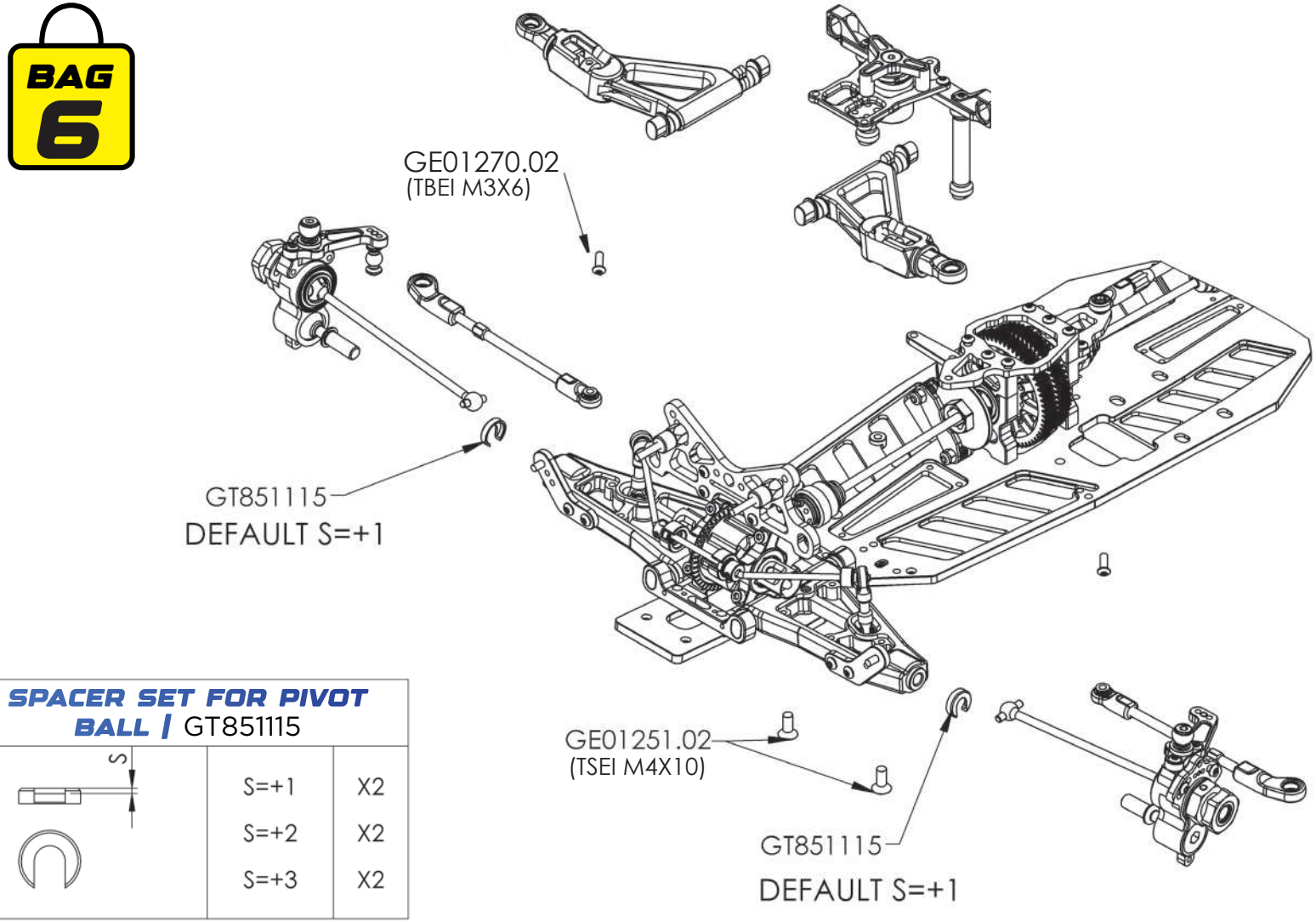

SPACER SET FOR PIVOT BALL | GT851115		
	S=+1	X2
	S=+2	X2
	S=+3	X2

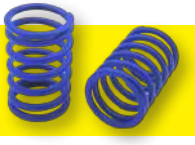

KIT SPRINGS

GT858000 - SHOCK SPRINGS SET (10)

GT858001 - SHOCK SPRINGS SET KIT LINEAR (8)

GT858001 - SHOCK SPRINGS SET KIT PROGESSIVE (5)

SILICONE OILS

CODE	CST	ML
GE04000.30	300	60
GE04000.40	400	60
GE04000.50	500	60
GE04000.60	600	60
GE04000.70	700	60
GE04000.80	800	60
GE04001.00	1000	60
GE04002.00	2000	60
GE04003.00	3000	60
GE04004.00	4000	60

GE04005.00	5000	60
GE04006.00	6000	60
GE04007.00	7000	60
GE04008.00	8000	60
GE04009.00	9000	60
GE04010.00	10K	60
GE04020.00	20K	60
GE04030.00	30K	60
GE04050.00	50K	60
GE04060.00	60K	60
GE04100.00	100K	60
GE04200.00	200K	60

GE04300.00	300K	60
GE04500.00	500K	60
GE04990.00	1MLN	60

35. SPRINGS LIST

GT8 & GENIUS XR4.22		1:5 F1 & XR - XR4 EVO
LINEAR	**PROGRESSIVE**	**BICONICAL**
SOFT		SOFT
ORANGE GT858065		YELLOW GE00766.00
	GOLD GT858080	BLACK GE00768.00
YELLOW GT858060		SILVER GE00759.01
	PINK GT858082	
RED GT858055		GREEN FLUO GE00769.04
	PURPLE GT858085	
WHITE GT858050		ORANGE GE00769.03
	SILVER GT858090	LIGHT BLUE GE00767.00
DARK BLUE GT858070		GREEN GE00760.01
BLUE GT858045		GOLD GE00761.01
	OCRA GT858095	
DARK GREY GT858075		RED GE00769.00
	GREEN FLUO GT858100	WHITE GE00769.01
BLACK GT858040		PINK GE00769.02
HARD		HARD

GTC8.25

NITRO + ECO

BAG 12

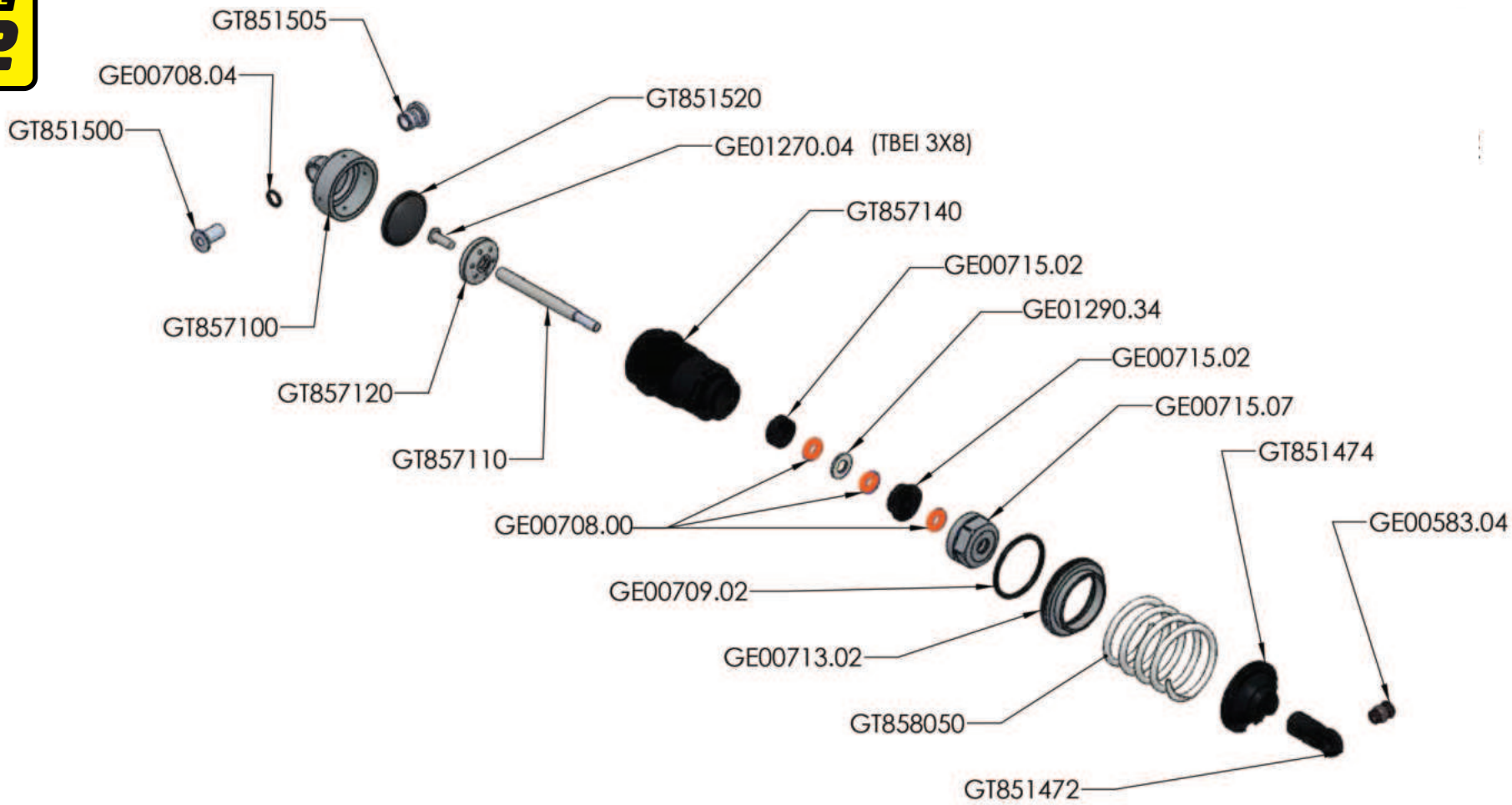

NITRO + ECO

OPTIONAL

GT850049

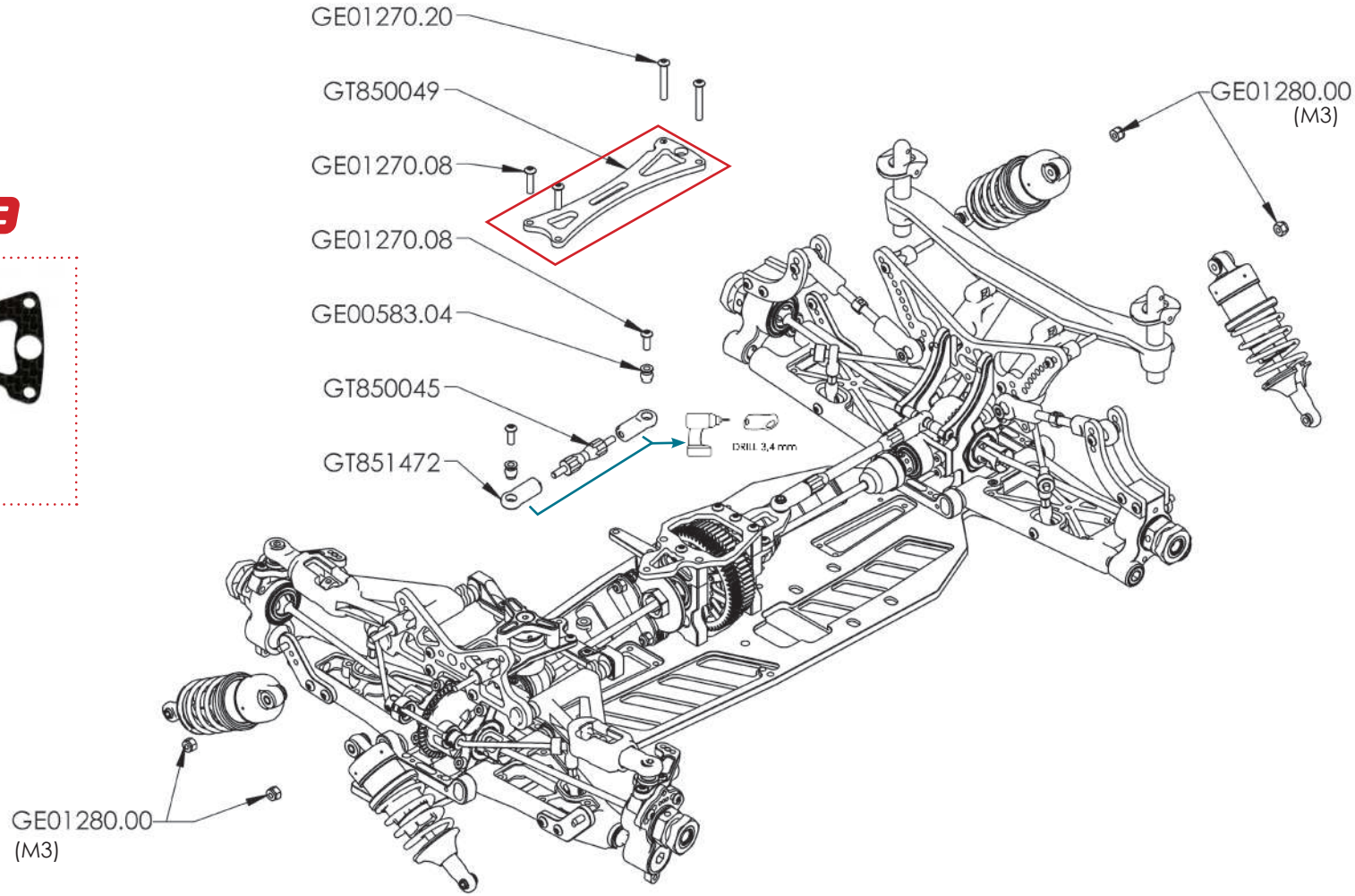

38. FRONT BAUMPER ASSEMBLING

GTC8.25

NITRO + ECO

BAG 10

OPTION
carbon

GT850161

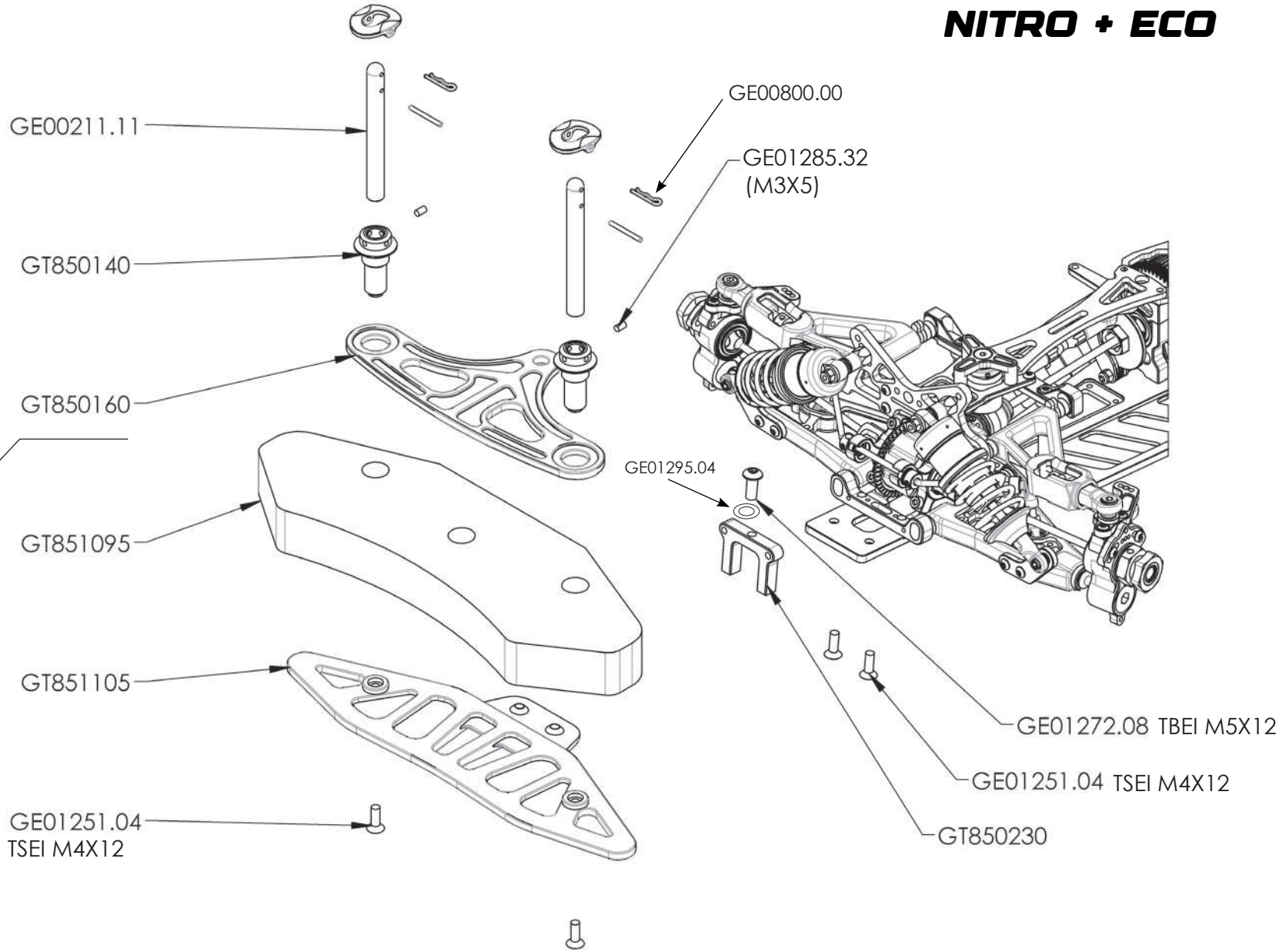

39. GAS BRAKES ARMS

NITRO

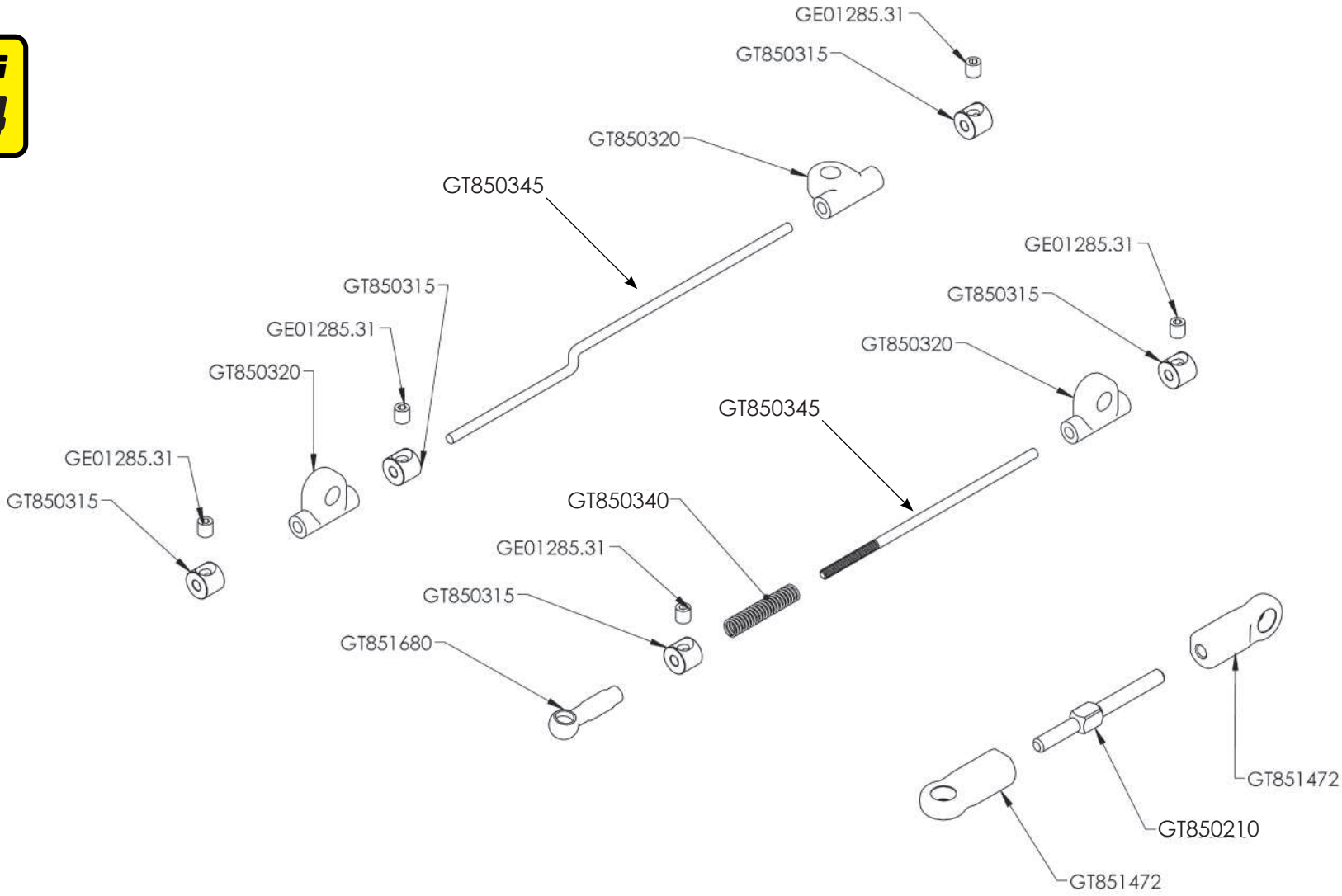

40. RADIO PLATE NITRO

GTC8.25

NITRO

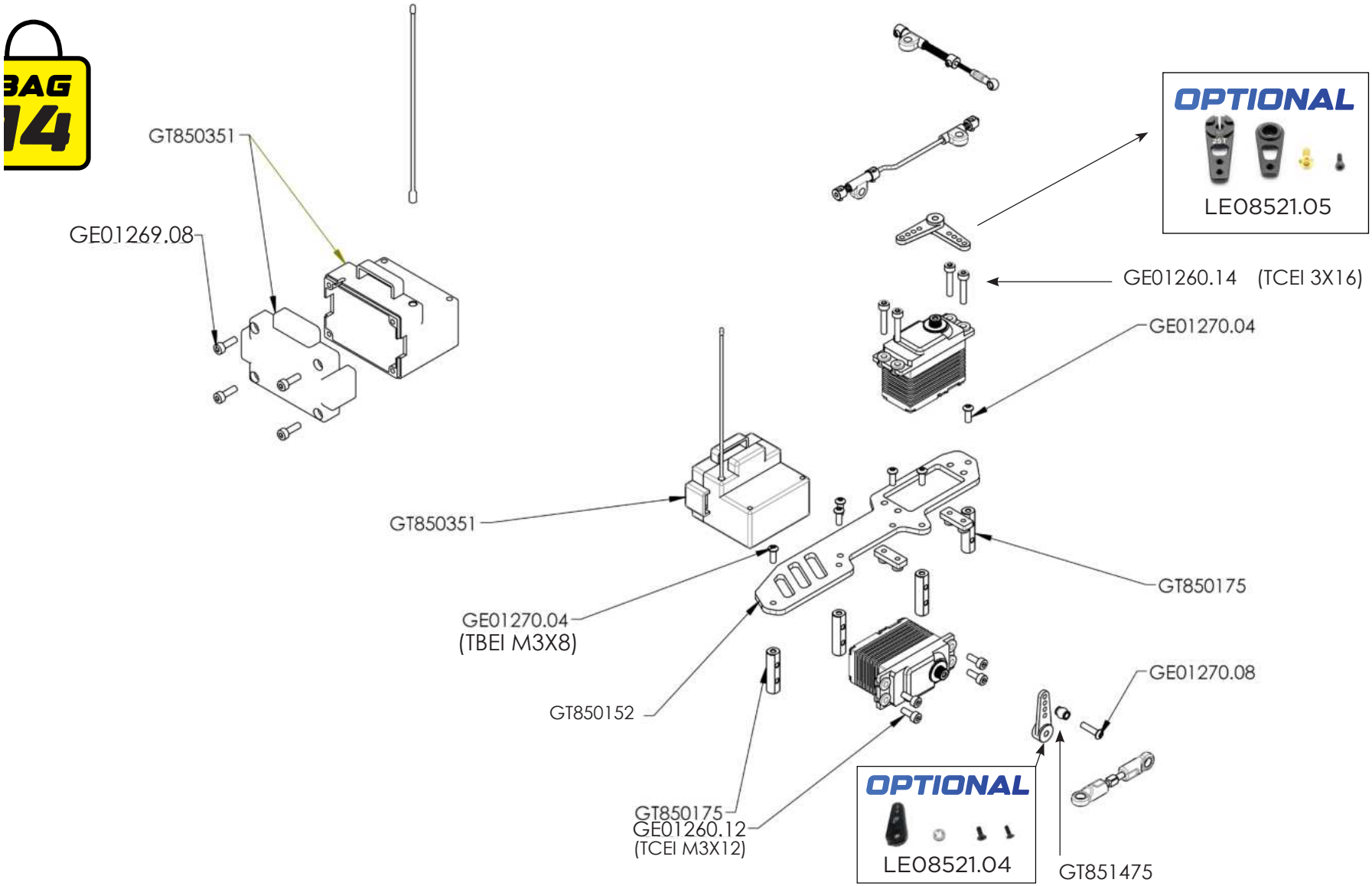

GTC8.25

NITRO

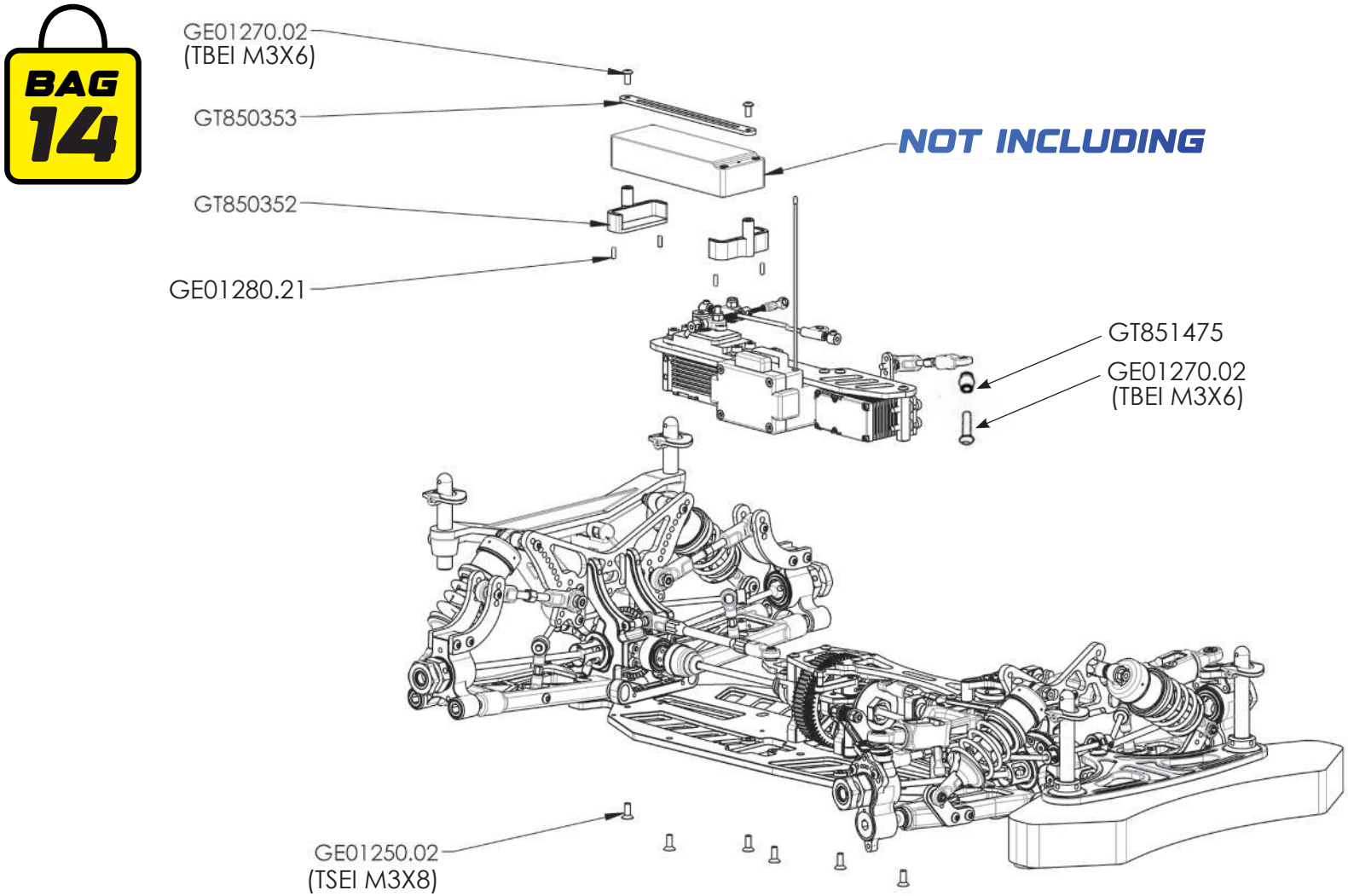

42. RADIO PLATE ECO

ECO

BAG 13

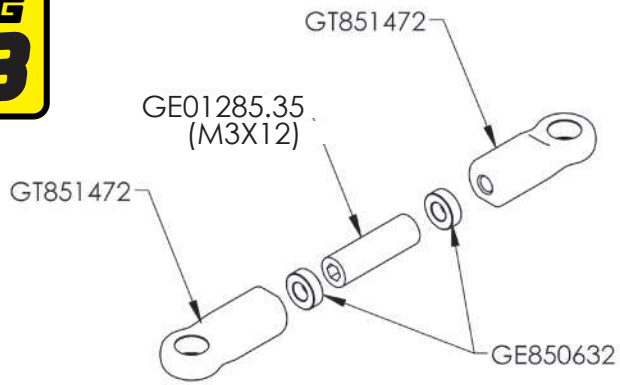

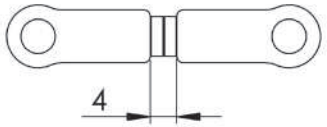

STANDARD SETTINGS

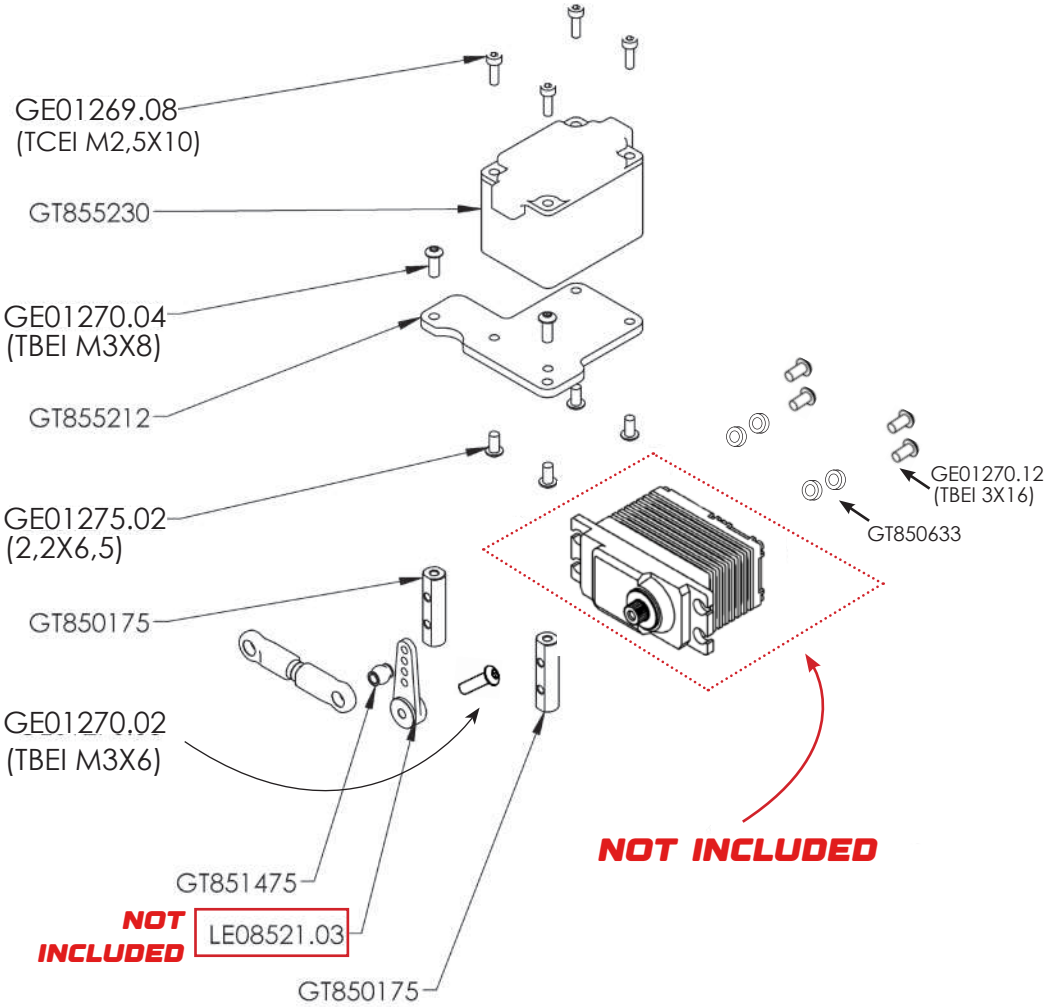

43. BATTERY & RADIO MOUNT

GTC8.25

ECO

BAG 13

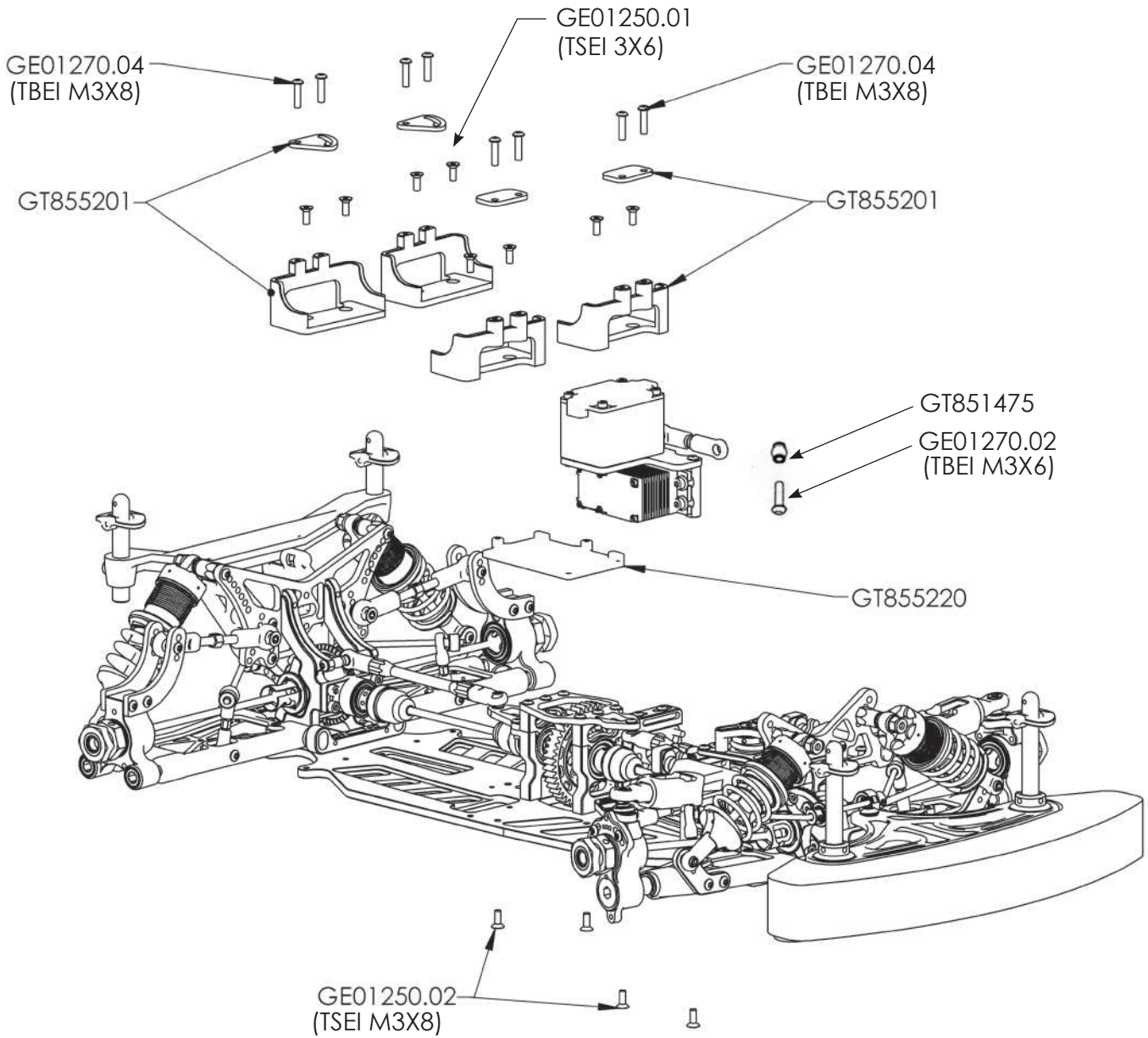

BAG 15

OPTIONS CLUTCH BELL

GT851873	14/19
GT851874	14/18
GT851871	13/18 STANDARD
GT851872	13/17

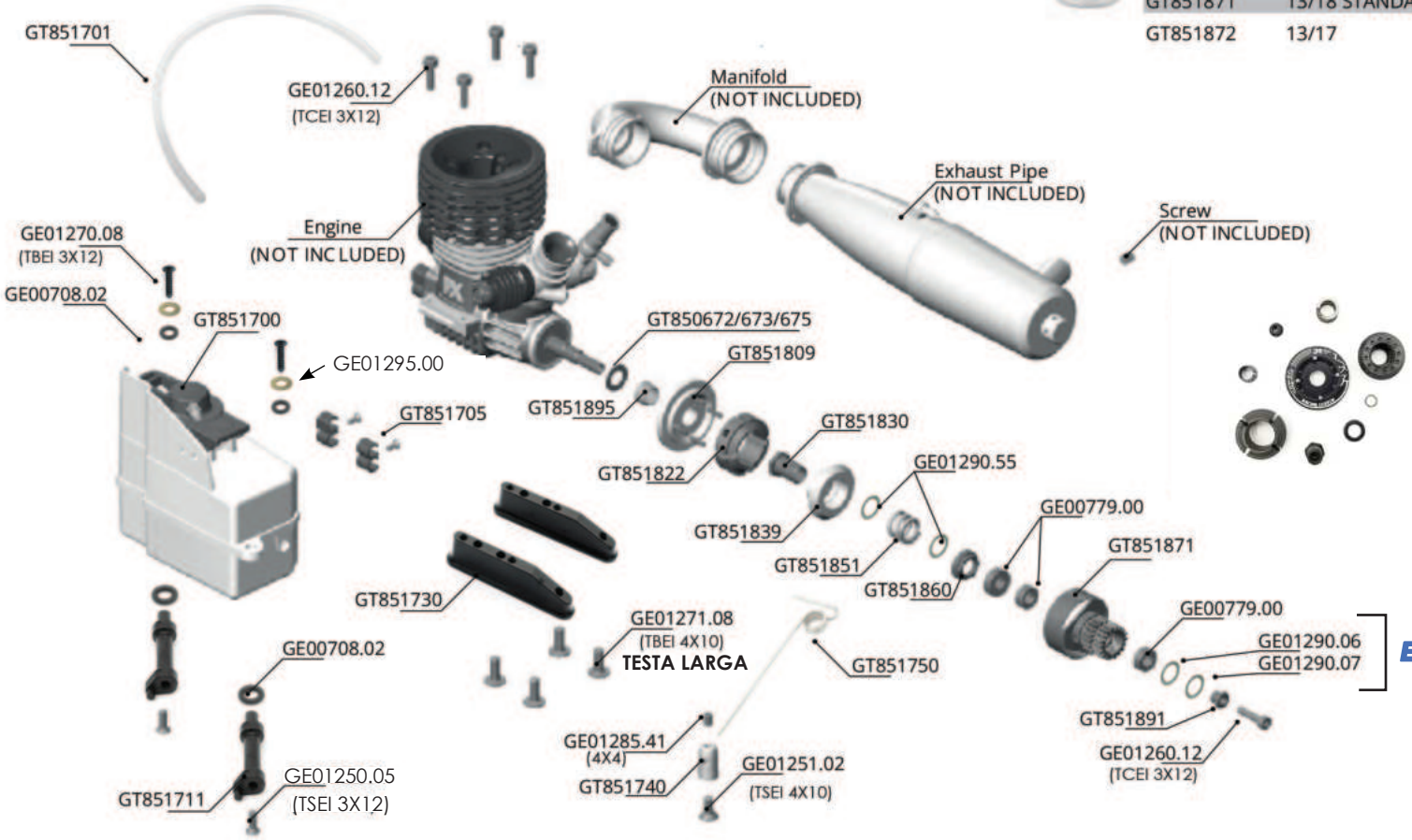

OPTIONS CLUTCH

34mm	GT851799
36mm	GT851801
38mm	GT851805

45. CLUTCH ASSEMBLING

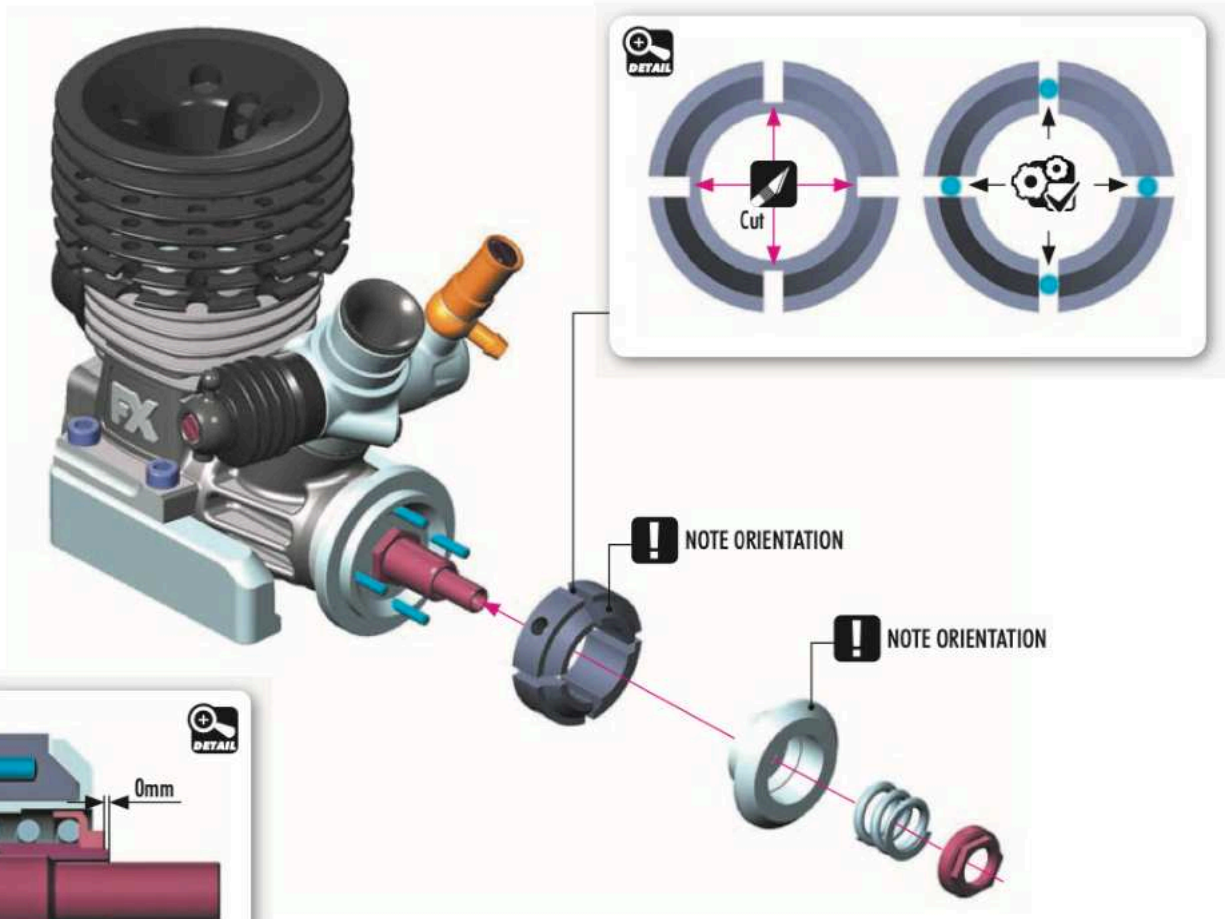

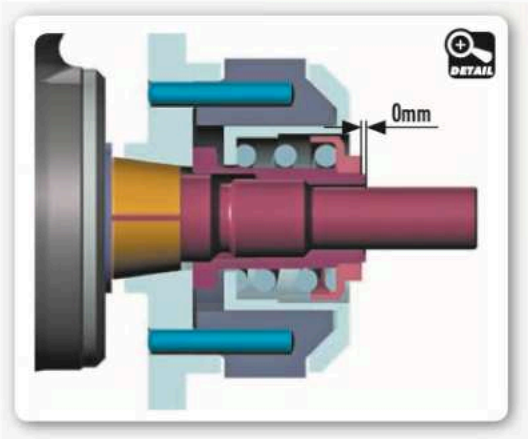

46. CLUTCH ASSEMBLING

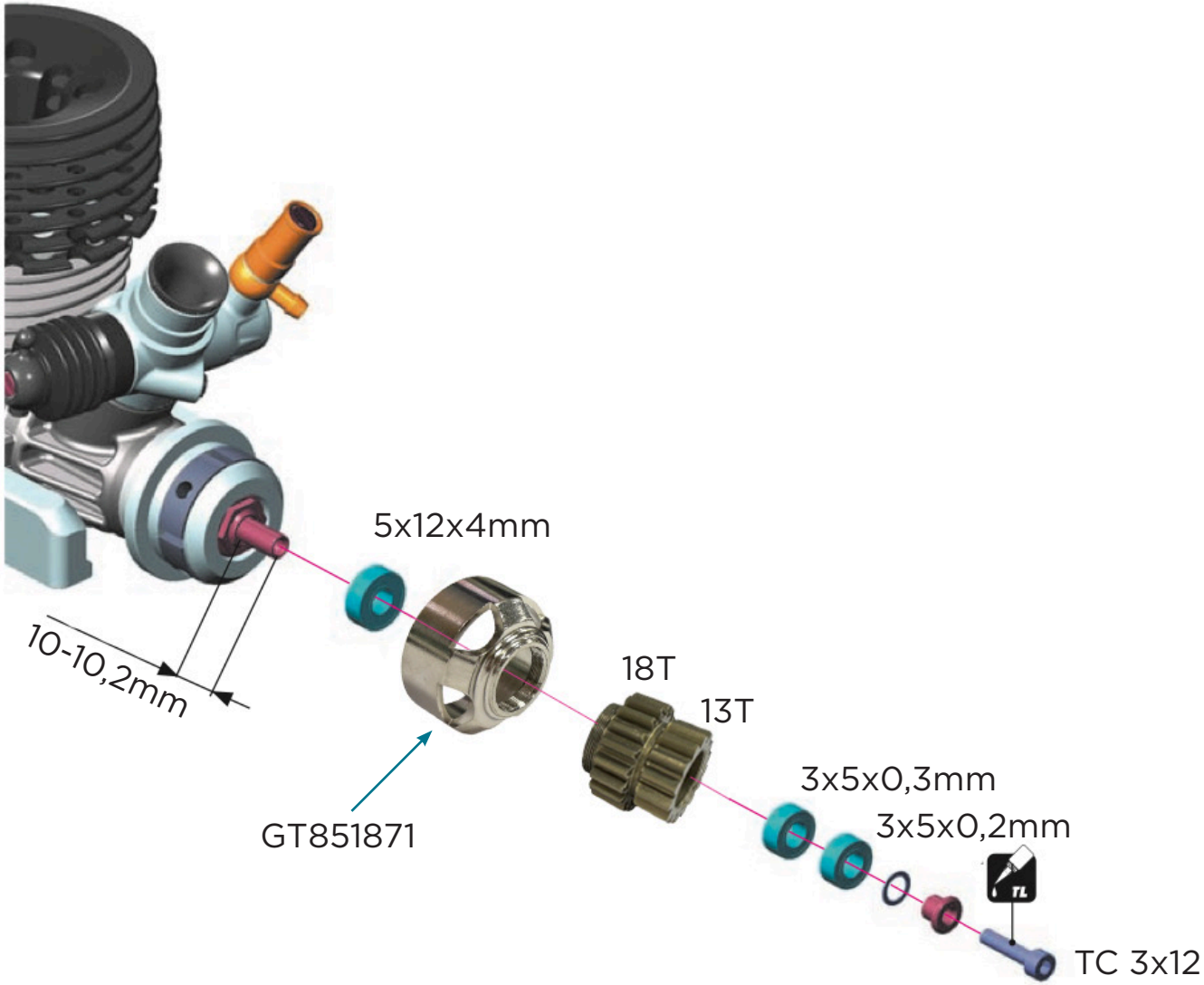

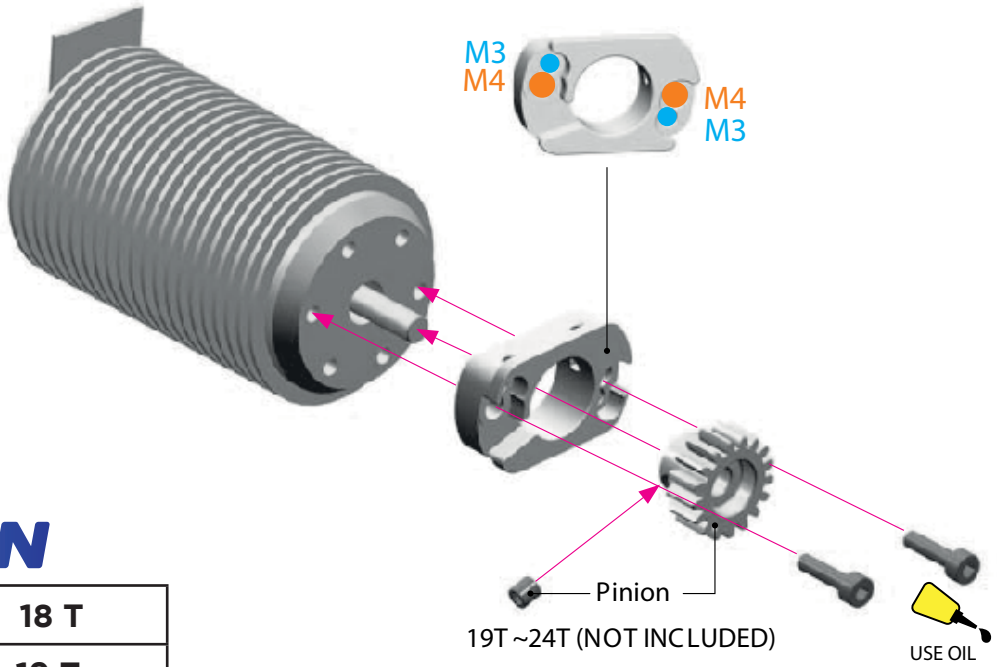

Use M3 or M4 screws which fit your motor.
(M4 INITIAL SETTING)

PINION

GT855118	18 T
GT855119	19 T
GT855120	20 T
GT855121	21 T
GT855122	22 T
GT855123	23 T
GT855124	24 T

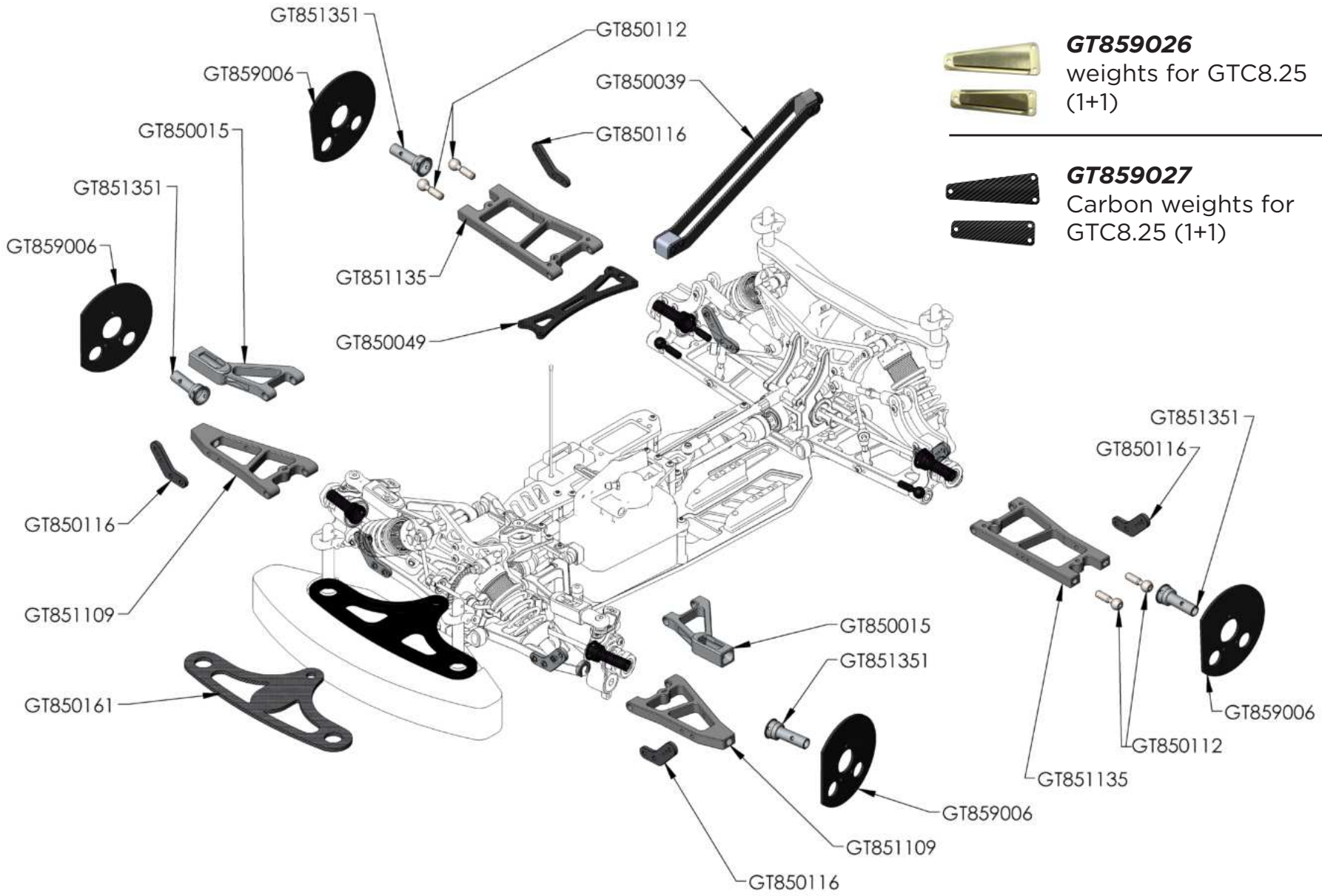

GT859026
weights for GTC8.25 (1+1)

GT859027
Carbon weights for GTC8.25 (1+1)

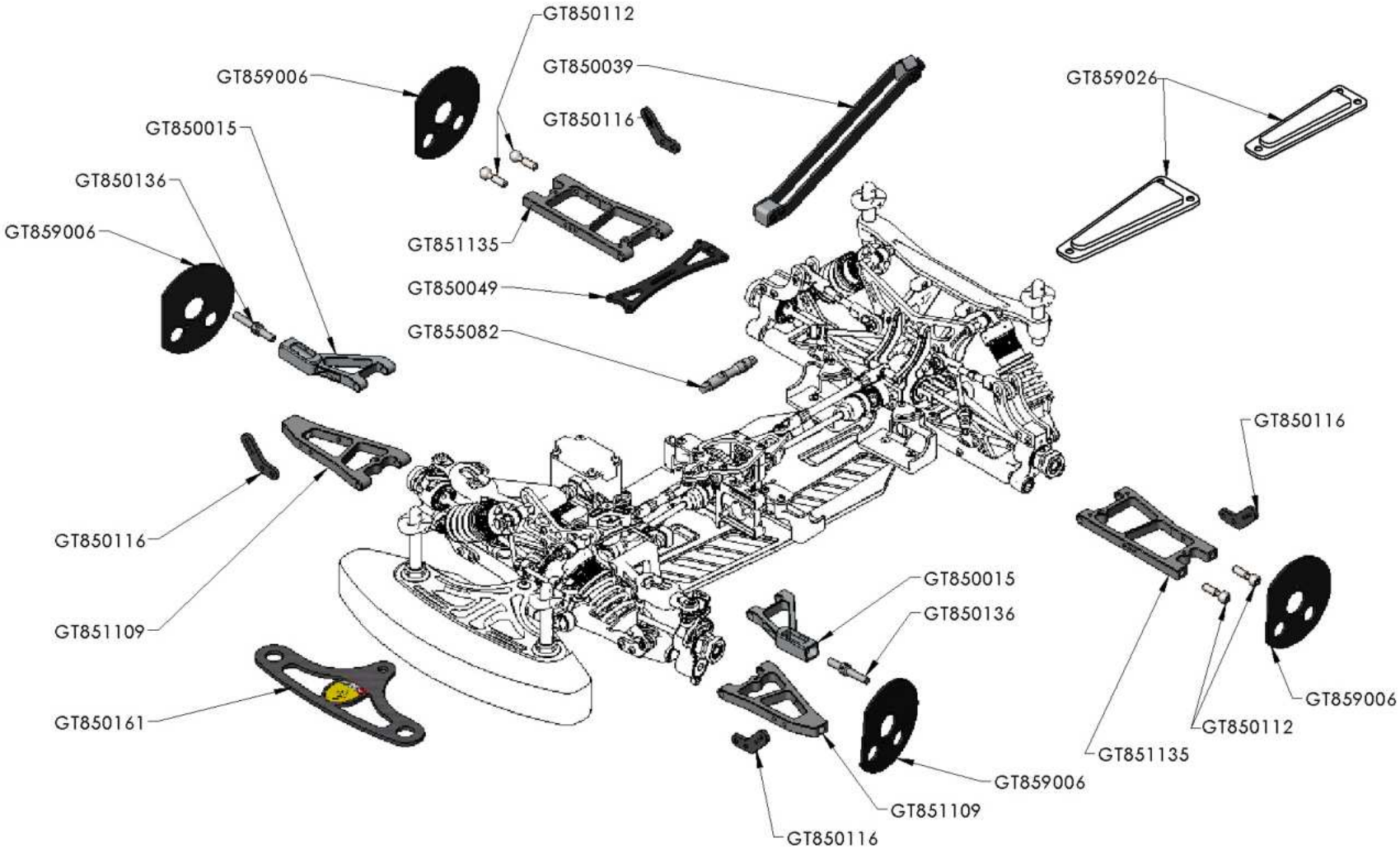
GT850112
GT850039
GT859006
GT850116
GT859026
GT850015
GT850136
GT859006
GT851135
GT850049
GT855082
GT850116
GT850116
GT851109
GT850015
GT850136
GT850161
GT859006
GT850112
GT851135
GT859006
GT851109
GT850116

MODELTEK

di Noacco Zeno

Via Madonna di Strada,34
33048 San Giovanni al Natisone (UD) Italy

+39 **0432 1849976** | info@genius-racing.com

www.modeltekshop.com | www.genius-racing.com

GENIUSRACING GENIUSRACINGXR