GENIUS

# GTC8.25

## INSTRUCTION MANUAL

## 2025

NITRO - ELECTRIC

# INDEX


1. DIFFERENTIALS
2. DIFFERENTIALS
3. DIFFERENTIALS
4. DIFFERENTIALS
5. DIFFERENTIALS
6 GEAR BOX
7. GEAR BOX
8. GEAR BOX
9. CENTER SOLD SHAFT E BRAKE
10. CENTER MOUNT E MOTOR
11. CENTER SOLD SHAFT E BRAKE
12. CENTER SOLID SHAFT E MOUNT
13. REAR ASSEMBLING
14. REAR BULKHEAD
15. REAR BALL DRIVE SHAFT
16. REAR BALL DRIVE SHAFT
17. REAR REINCORCEMENT BRACE
18. FRONT BULKHEAD
19. FRONT BALL DRIVE
20. LOWER SUSPENCION ARM REAR
21. REAR UPRIGHT
22. REAR ROLLBARS ARMS
23. REAR UPRIGHT ARMS
24. REAR ANTI ROLLBAR
25. REAR ASSEMBLING
26. LOWER SUSPENSION ARMS FRONT
27. FRONT ANTI ROLLBAR
28. FRONT UPRIGHT
29. LOW. SUSP. ARM FRONT MOUNT.
30. ASSEMBLING FRONT UP ARMS
31. STEARING ARMS
32. SERVO SAVER
33. FRONT ASSEMBLING
34. SPRINGS E OILS
35. SPRING LIST
36. SHOCK ABSORBERS
37. SHOCK ASSEMBLING
38. FRONT BAUMPER ASSEMBLING
39. GAS BRAKES ARMS
40. RADIO PLATE NITRO
41. RADIO PLATE ASSEMBLING
42. RADIO PLATE ECO
43. BATTERY E RADIO MOUNT
44. CLUTCH E FUEL TANK
45. CLUTCH ASSEMBLING
46. CLUTCH ASSEMBLING
47. MOTOR MOUNT GEARS
48. OPTIONALS NITRO
49. OPTIONALS ECO

| BAGS INCLUDING IN THE KIT | |
|---|---|
| NITRO | ECO |
| 1 | 1 |
| 2 | 3 |
| 3 | 5 |
| 4 | 6 |
| 5 | 7 |
| 6 | 8 |
| 7 | 10 |
| 8 | 11 |
| 10 | 12 |
| 12 | 13 |
| 14 | |
| 15 | |

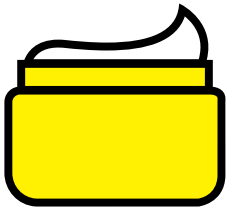

**GREASE**
GE00310.20

**GREEN GLUE**
GE04000.03

**BLUE GLUE**
GE04000.02

**ONE WAY**
GE00310.50

GTC8.25

NITRO + ECO

BAG 1

GT851276 DIFFERENTIAL 42T - SET

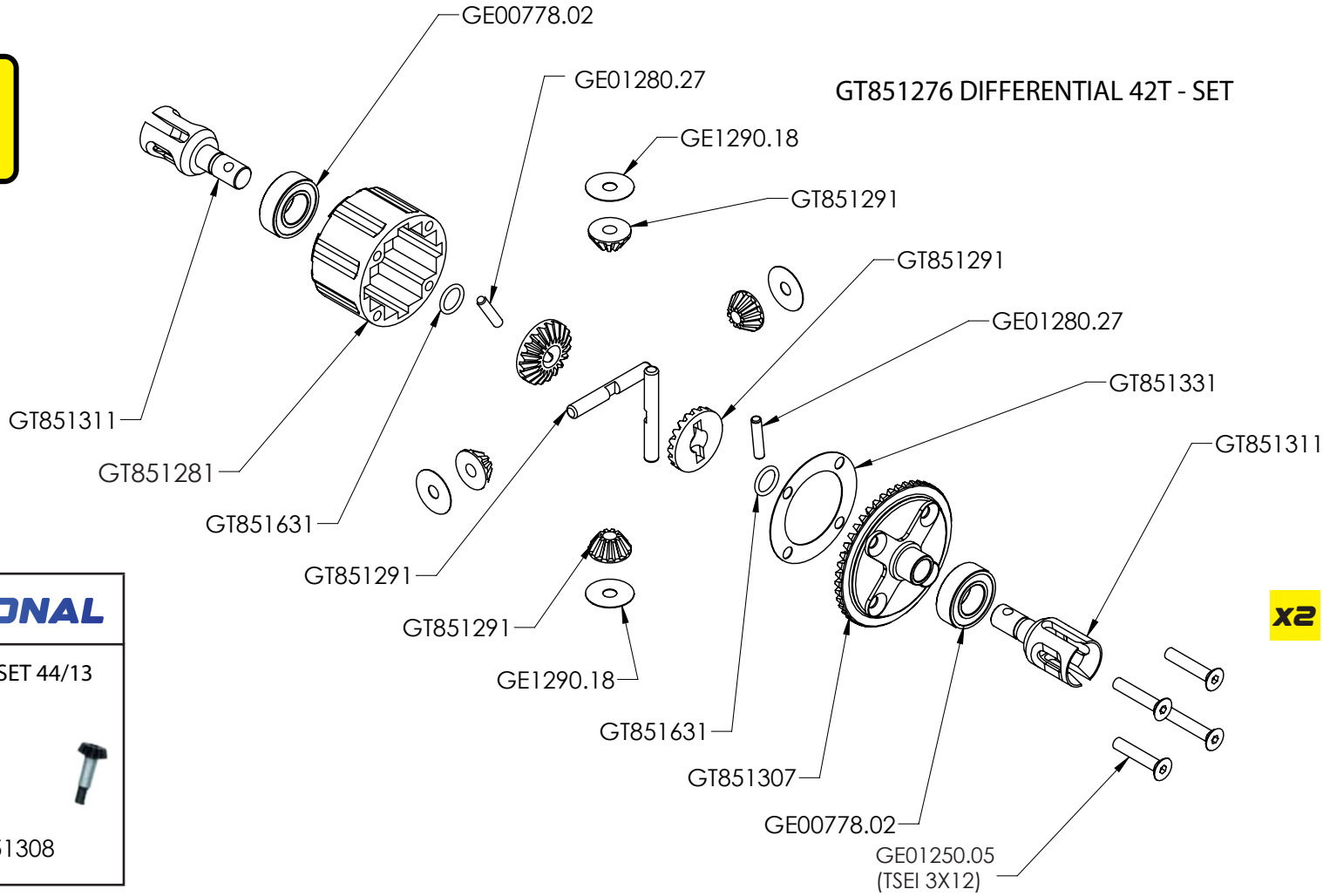


**OPTIONAL**

DIF GEAR SET 44/13

GT851308

GTC8.25

NITRO + ECO

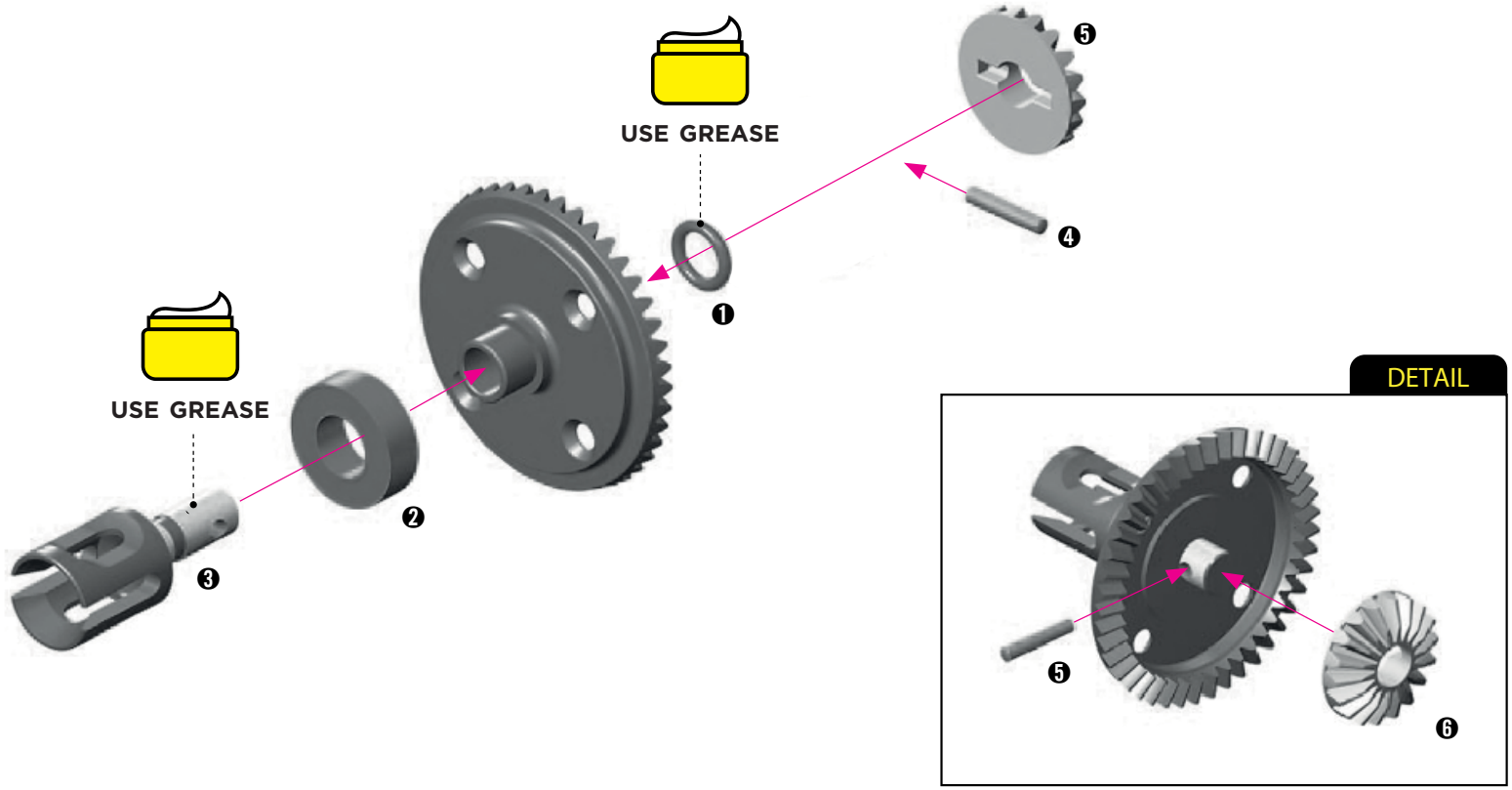

GTC8.25

NITRO + ECO

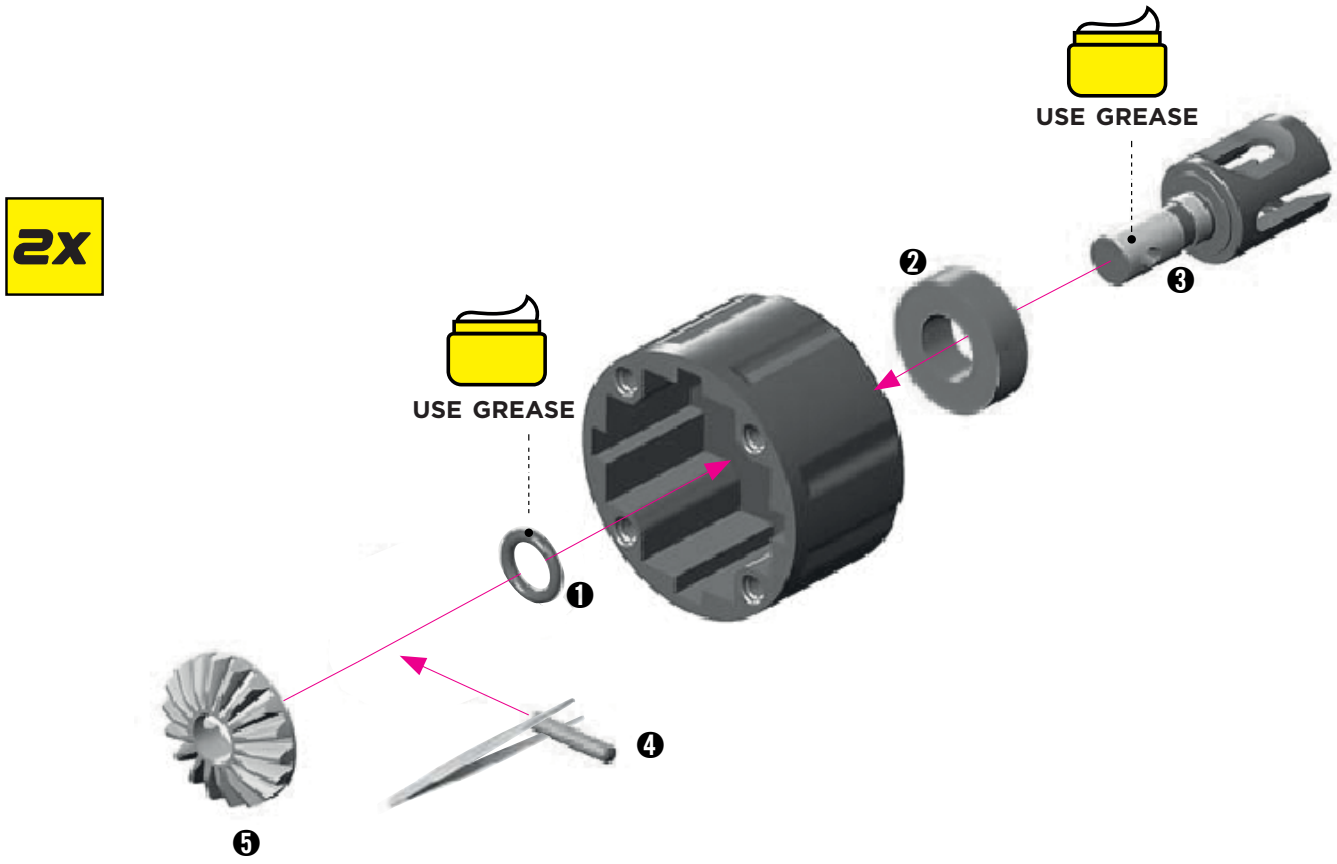

## NITRO + ECO

FRONT diff: 500.000cst / REAR diff: 10.000cSt

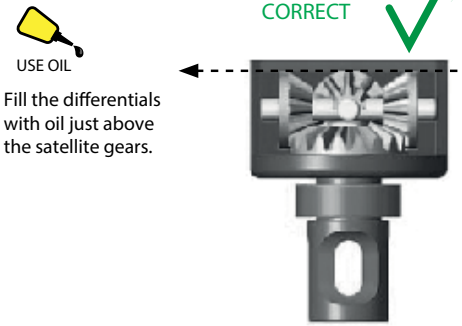


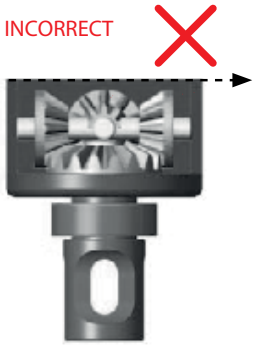

Fill the differentials with oil just above the satellite gears.

Tighten the screws equally

Finish tightening in this order

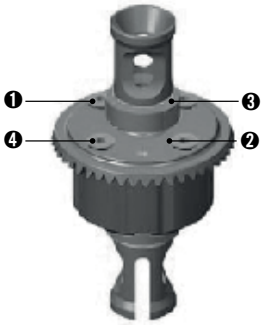


After assembly the differentials should have a length of 32.3~32.5 mm measured from the ends of the installed ball-bearings.
If differentials are longer, retighten the 4 screws holding the crown gears.

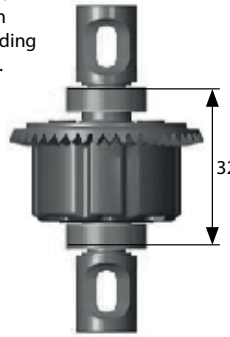


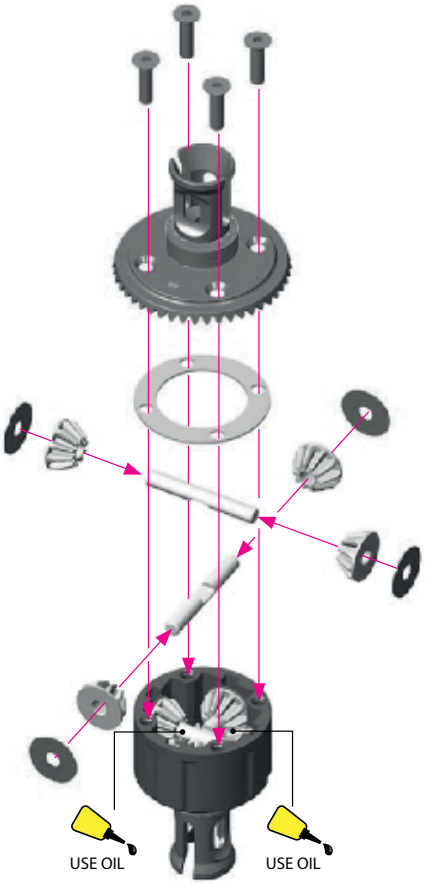


### FRONT & REAR DIFF GEAR MESH ADJUSTMENT

THE LOCATION OF THE SHIM(S) DEPENDS ON WHETHER YOU ARE TRYING TO CLOSE OR OPEN THE GAP.

If there is too much or too little diff side play, this may create non-optimal gear mesh between the diff gear and the pinion drive gear. This is easily resolved by inserting 1 or 2 of the included thin shims behind a diff outdrive ball-bearing , depending on how much play there is.

## NITRO + ECO

### TO CLOSE A WIDE GAP

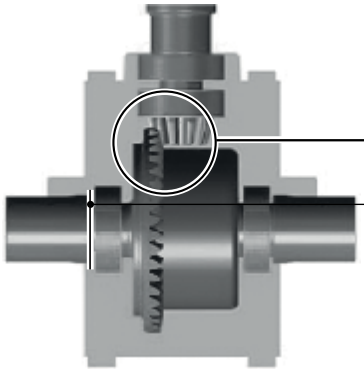

CLOSE A WIDE GAP

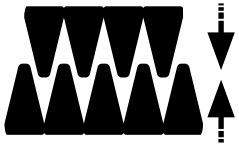

To C LOSE a wide gap:
add 1 or 2 shims
against diff spur gear

insert shim(s) here

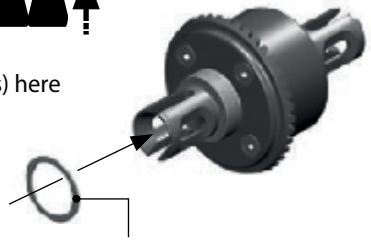

WASHER S 13 x 16 x 0.1 mm (10) (art. GE01291.11)
S 13 x 16 x 0.2 mm (10) (art. GE01291.12)

### TO OPEN A NARROW GAP

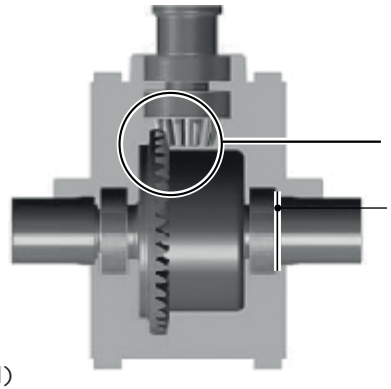

OPEN A NARROW GAP

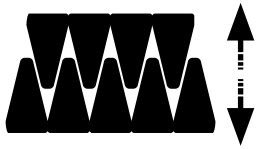

To OPEN a narrow gap:
add 1 or 2 shims on
the other side of the diff,
away from spur gear

insert shim(s) here

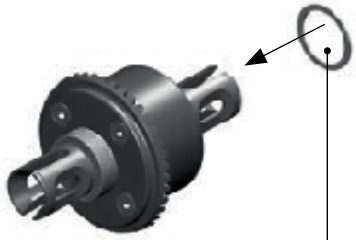

WASHER S 13x16x0.1mm (10)
S 13x16x0.2mm (10)

GTC8.25

NITRO

BAG 2

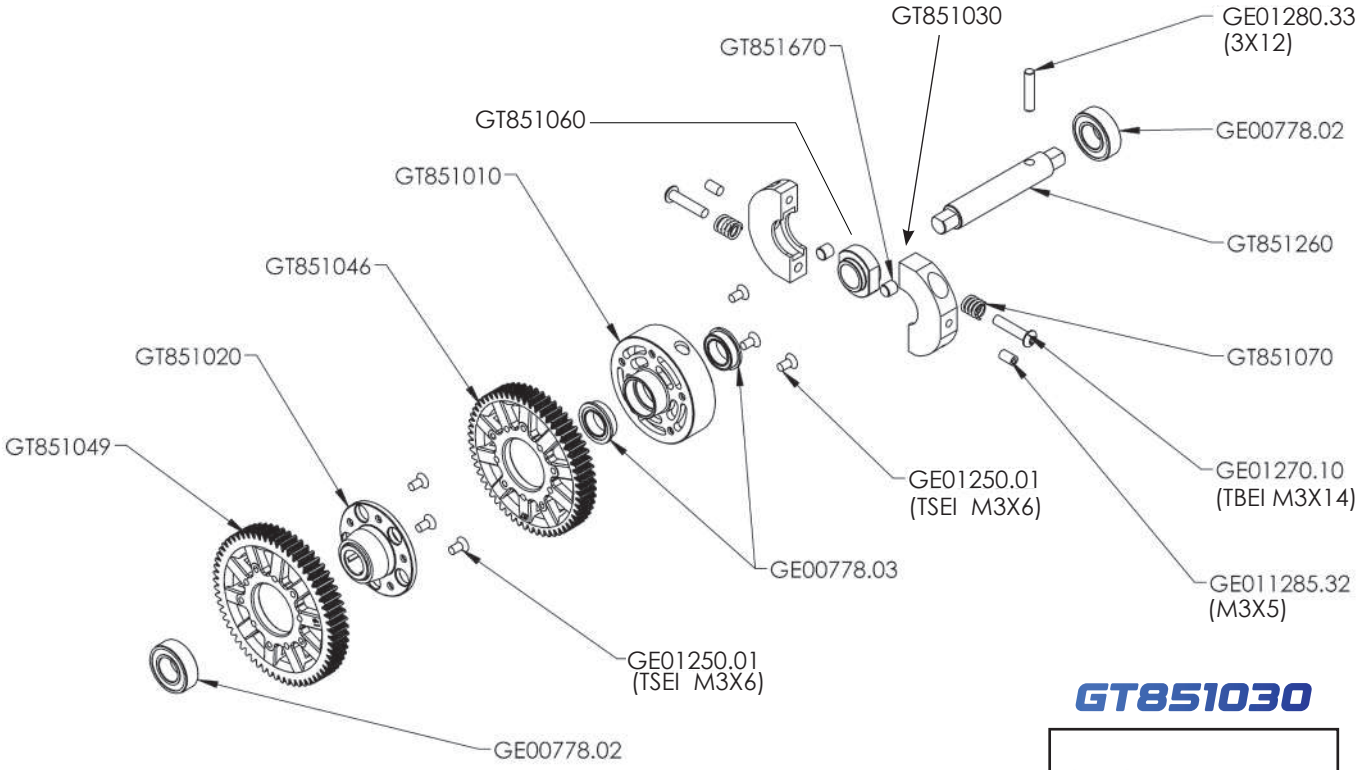


## GT851030

| 2-SPEED GEAR BOX | | |
|---|---|---|
| TYPE | TEETH | RS LINE |
| 1st GEAR | 48T | GT851048 |
| | 49T | GT851049 |
| | 50T | GT851050 |
| 2nd GEAR | 45T | GT851045 |
| | 46T | GT851046 |
| | 47T | GT851047 |

GTC8.25

NITRO

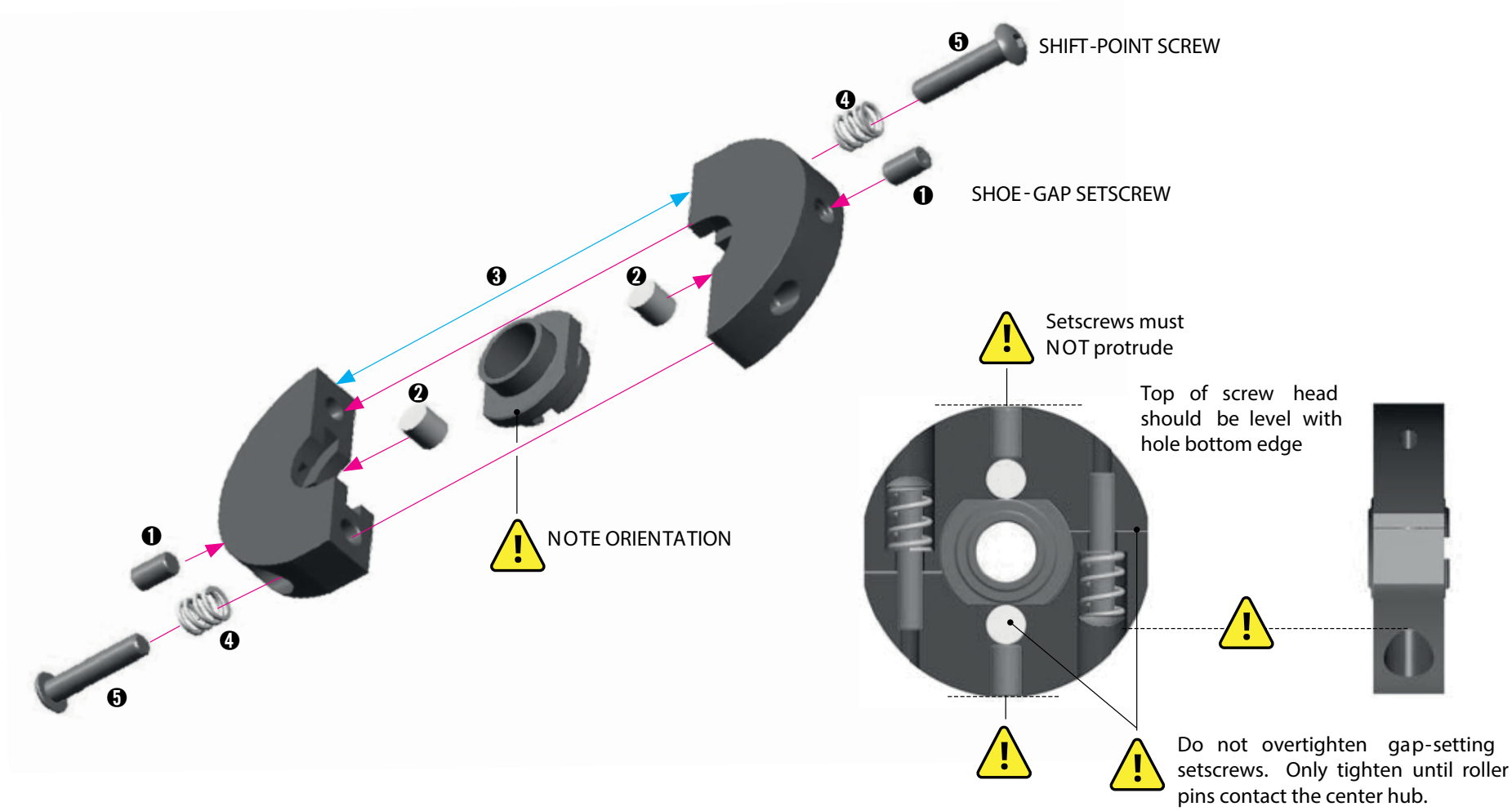
❺ SHIFT-POINT SCREW
❹
❶ SHOE-GAP SETSCREW
❸
❷
❷
❶
❹
❺
NOTE ORIENTATION
Setscrews must NOT protrude
Top of screw head should be level with hole bottom edge
Do not overtighten gap-setting setscrews. Only tighten until roller pins contact the center hub.

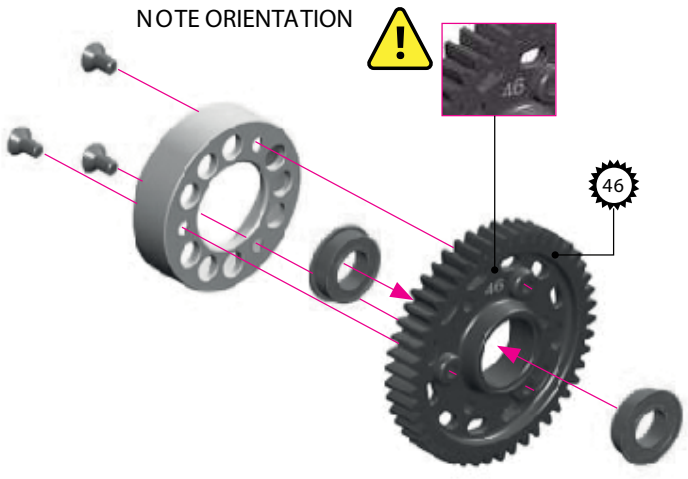
NOTE ORIENTATION
46

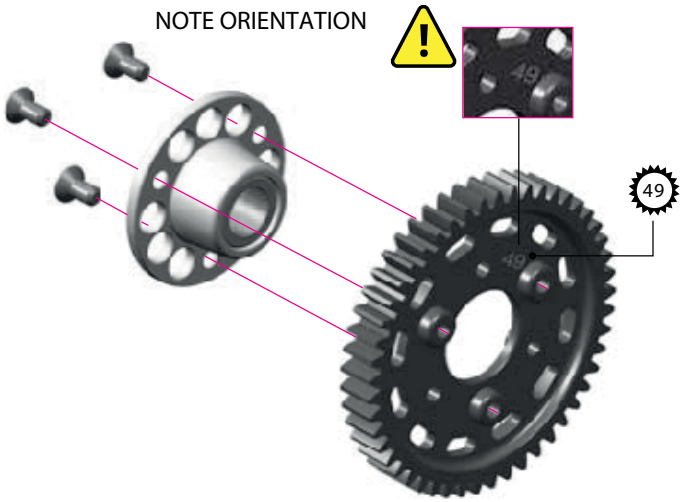
NOTE ORIENTATION
49

# 9. CENTER SOLID SHAFT & BRAKE

GTC8.25

NITRO

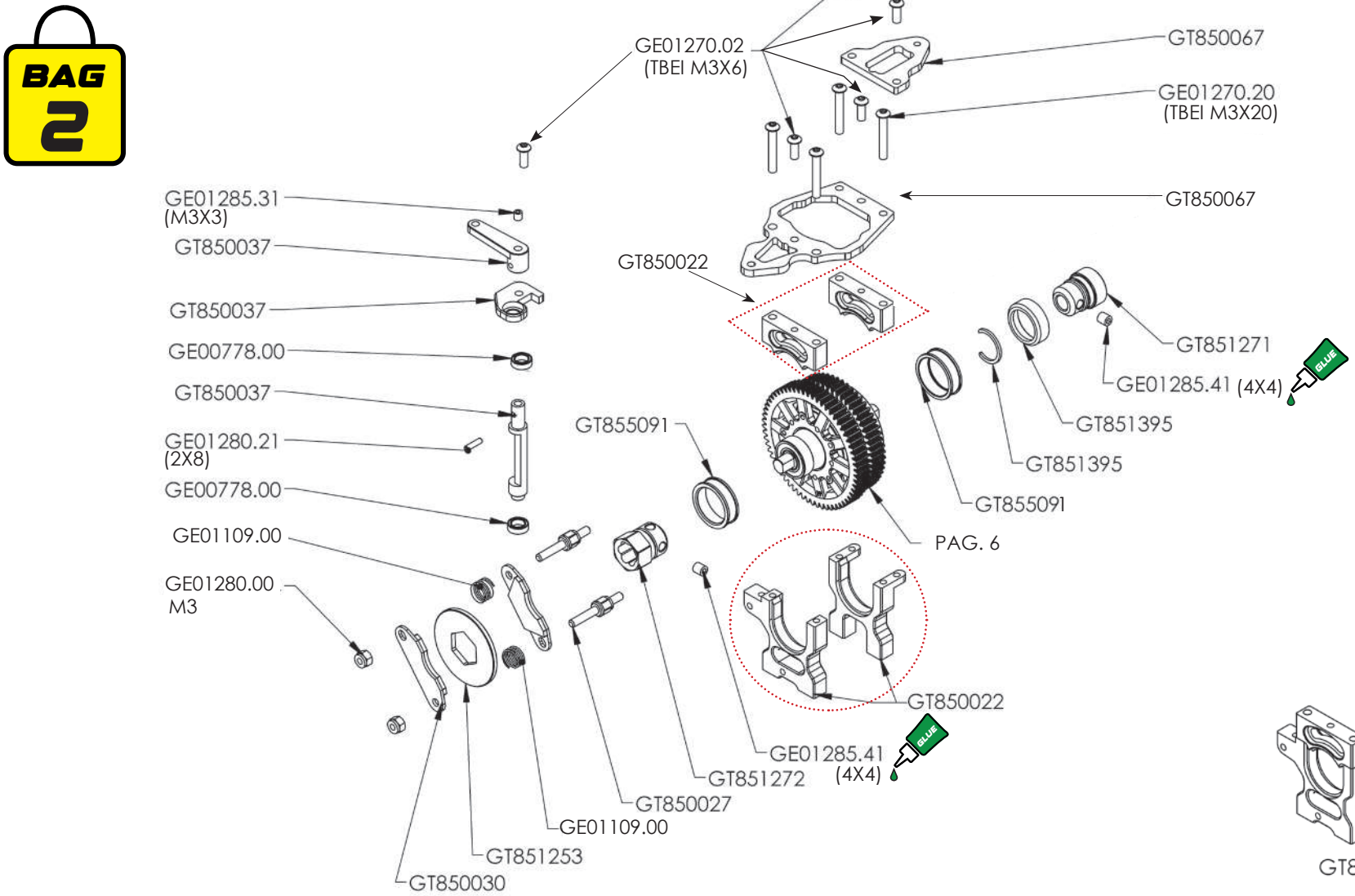


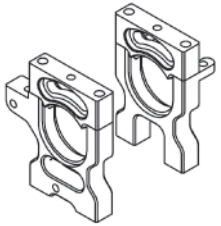

# 10. CENTER MOUNT & MOTOR

GTC8.25

ECO

BAG 11

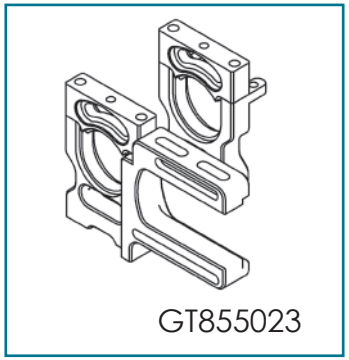


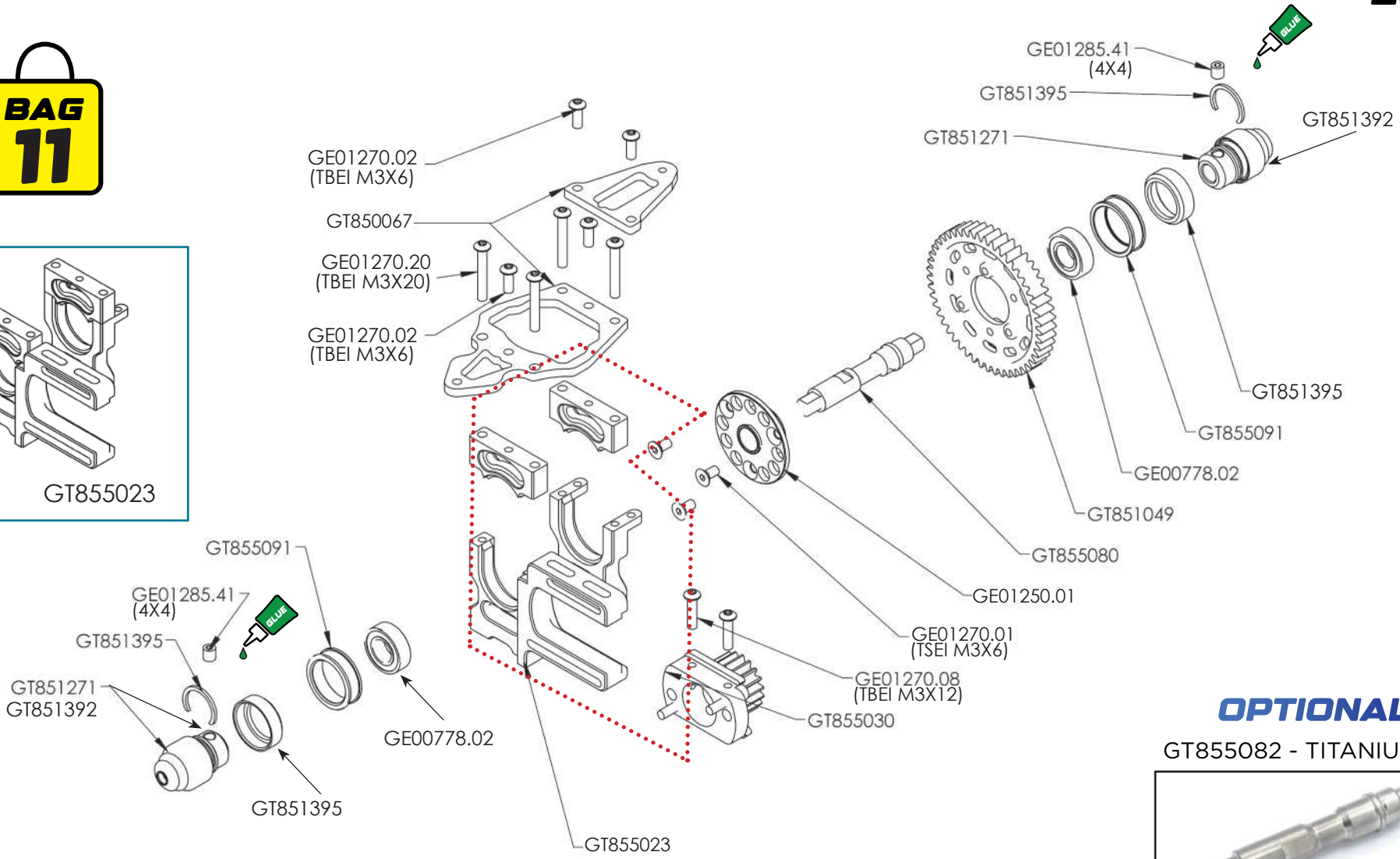


## OPTIONAL

GT855082 - TITANIUM 9gr

# 11. CENTER SOLID SHAFT & BRAKE

GTC8.25

NITRO

BAG 2

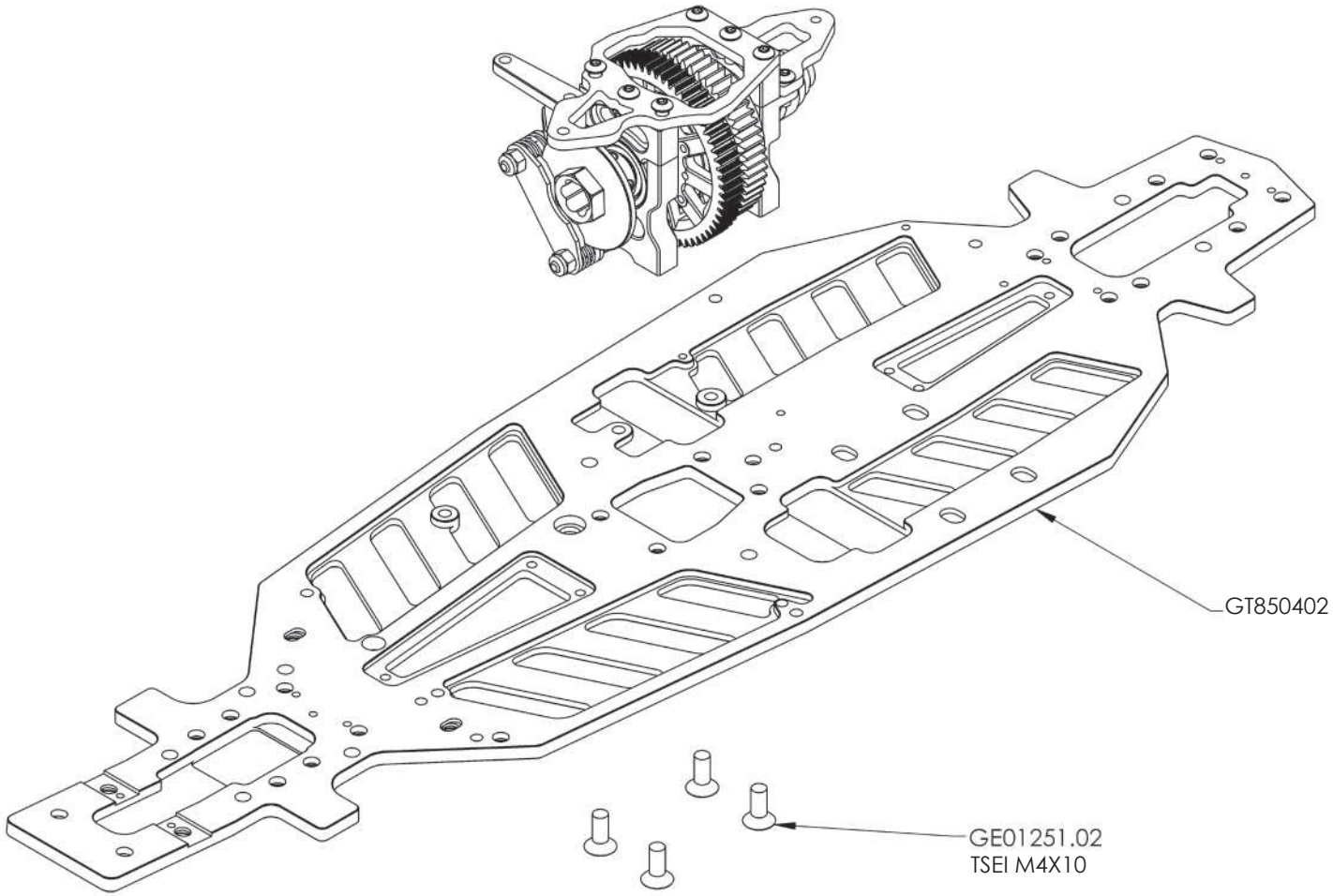

# 12. CENTER SOLID SHAFT & MOTOR

ECO

BAG 11

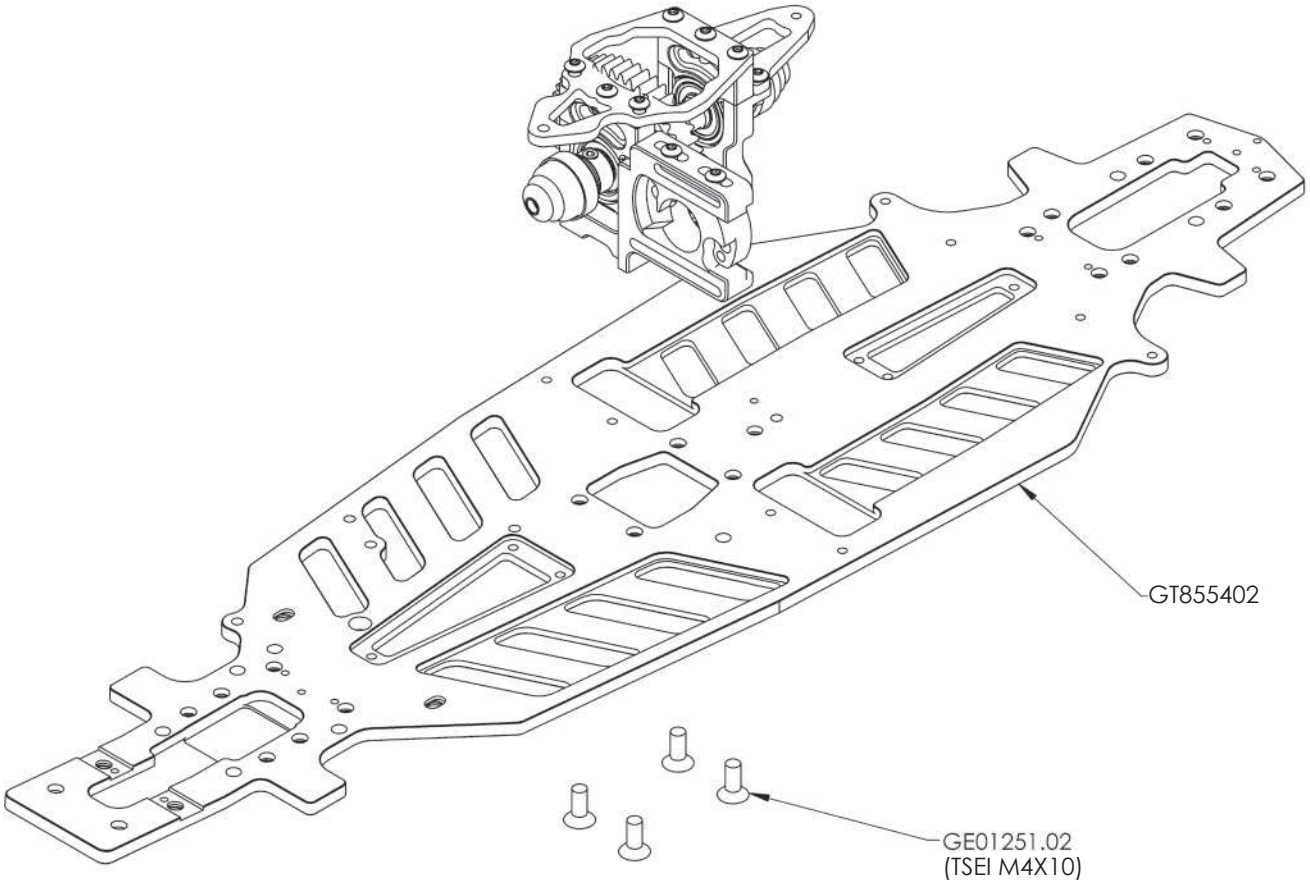

# 13. REAR ASSEMBLING

GTC8.25

## NITRO + ECO

BAG 3

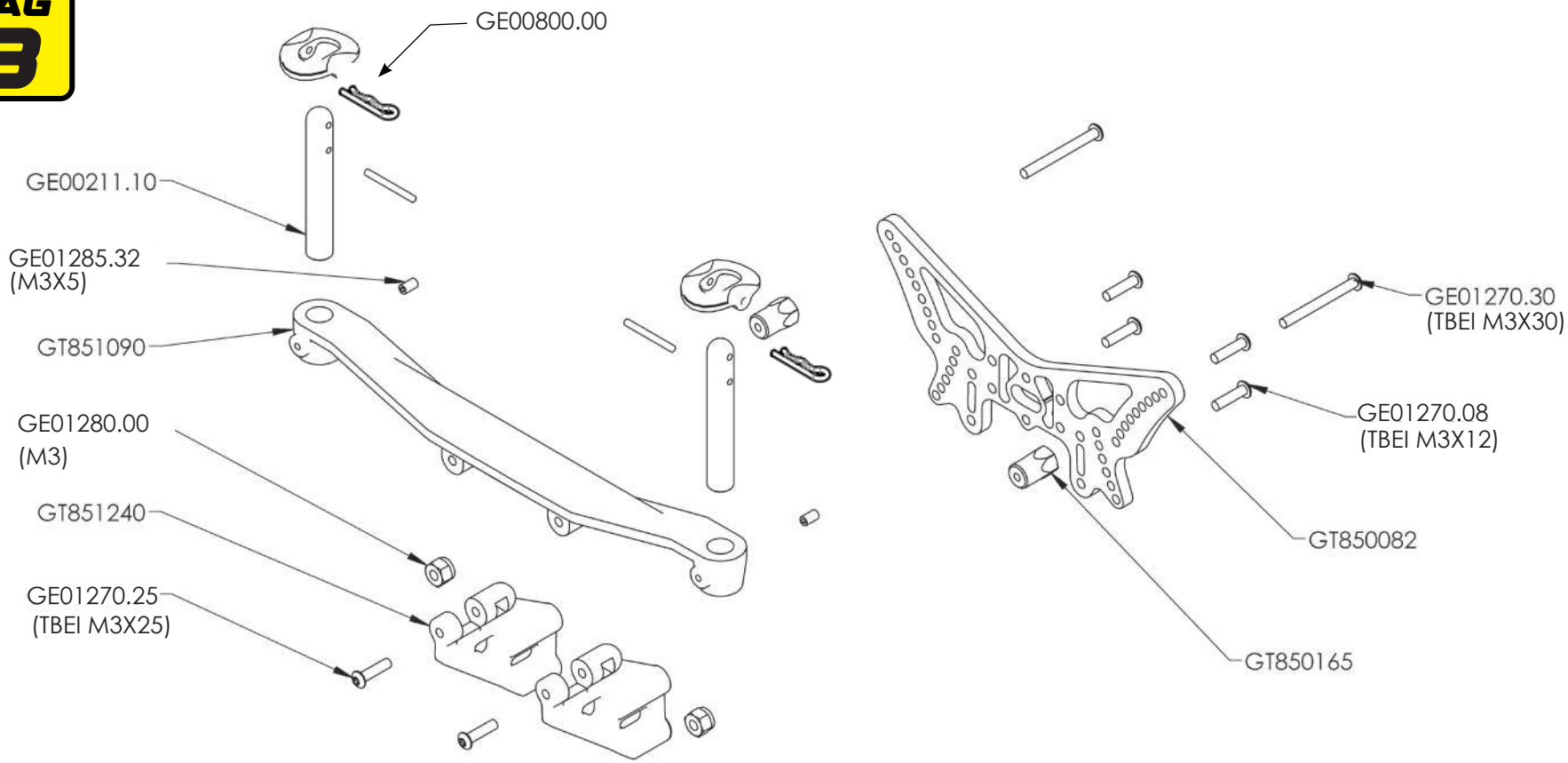

# 14. REAR BULKHEAD

GTC8.25

**NITRO + ECO**

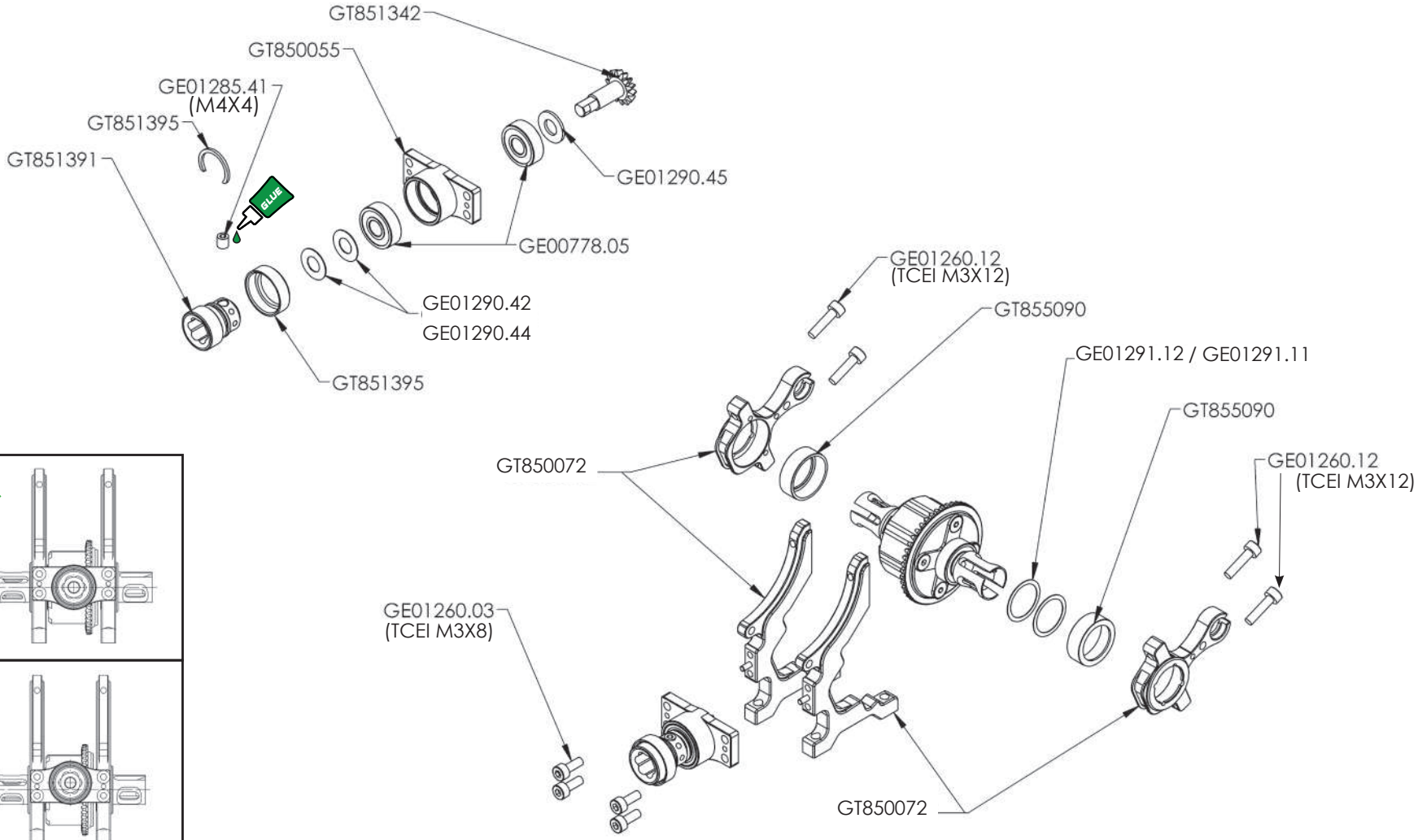


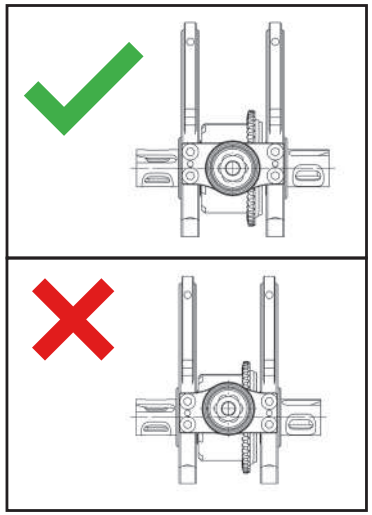

# 15. REAR BALL DRIVE SHAFT

GTC8.25

NITRO

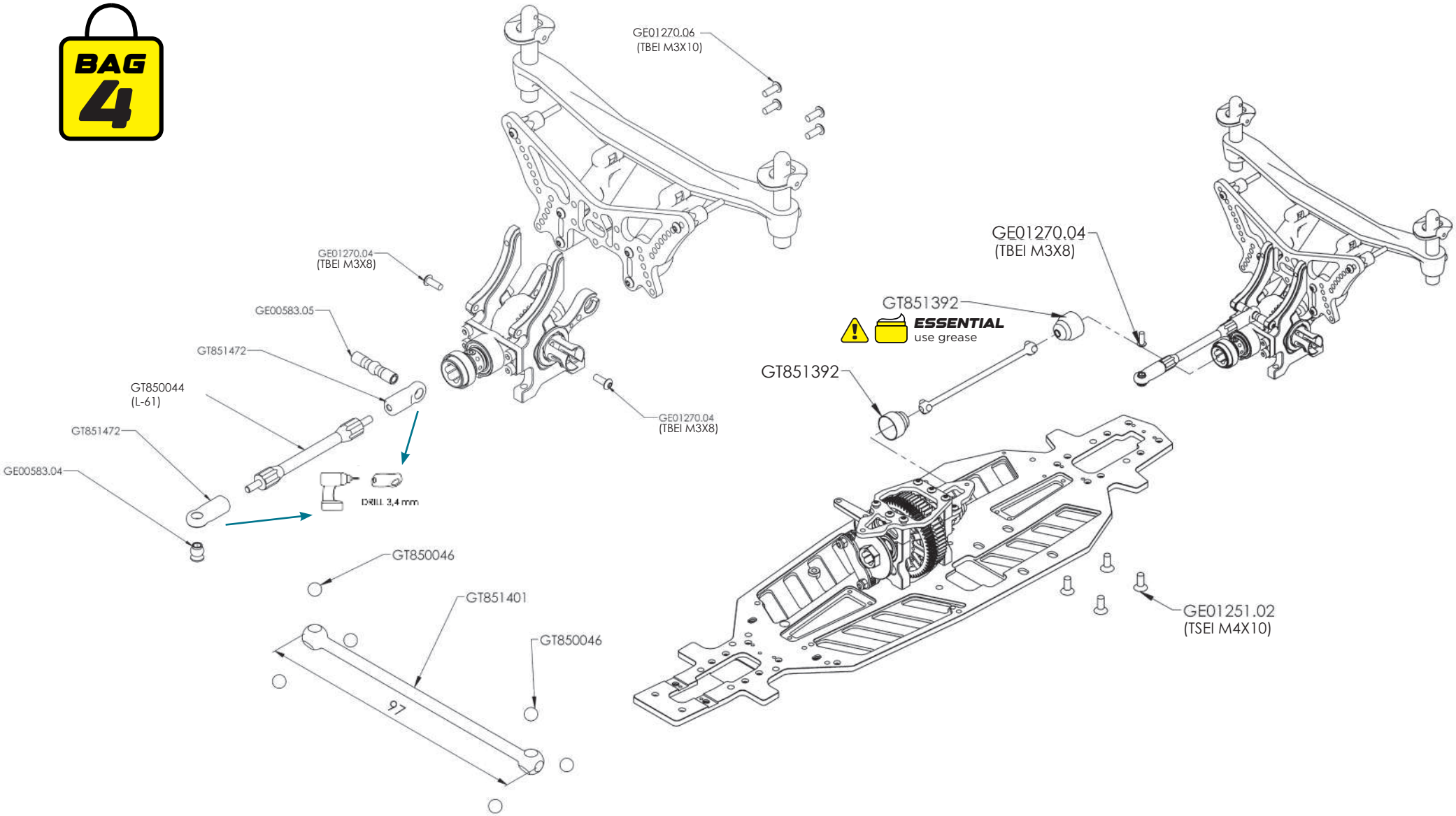

# 16. REAR BALL DRIVE SHAFT

GTC8.25

ECO

BAG 13

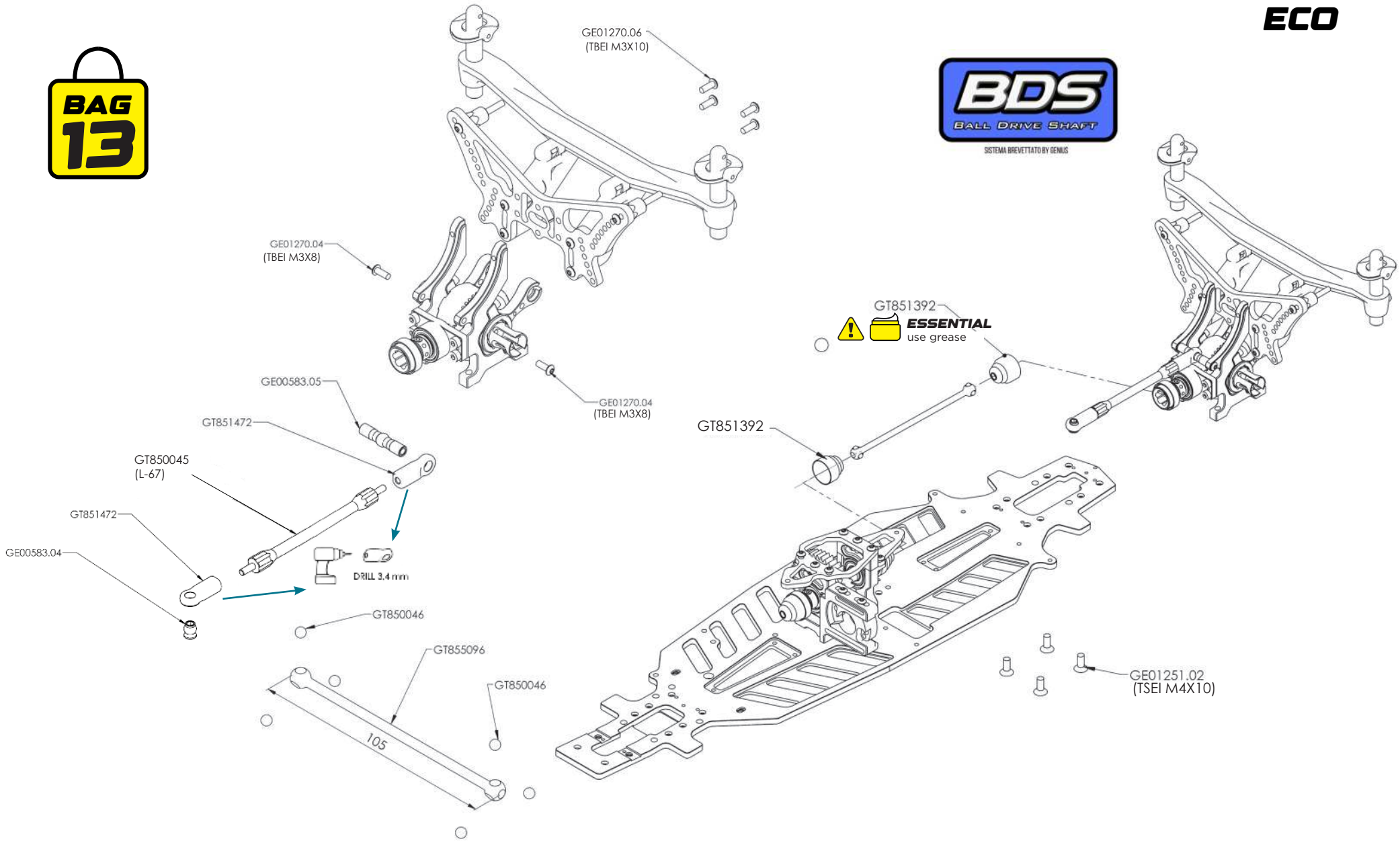

# 17. REAR REINFORCEMENT BRACE

GTC8.25

**NITRO + ECO**

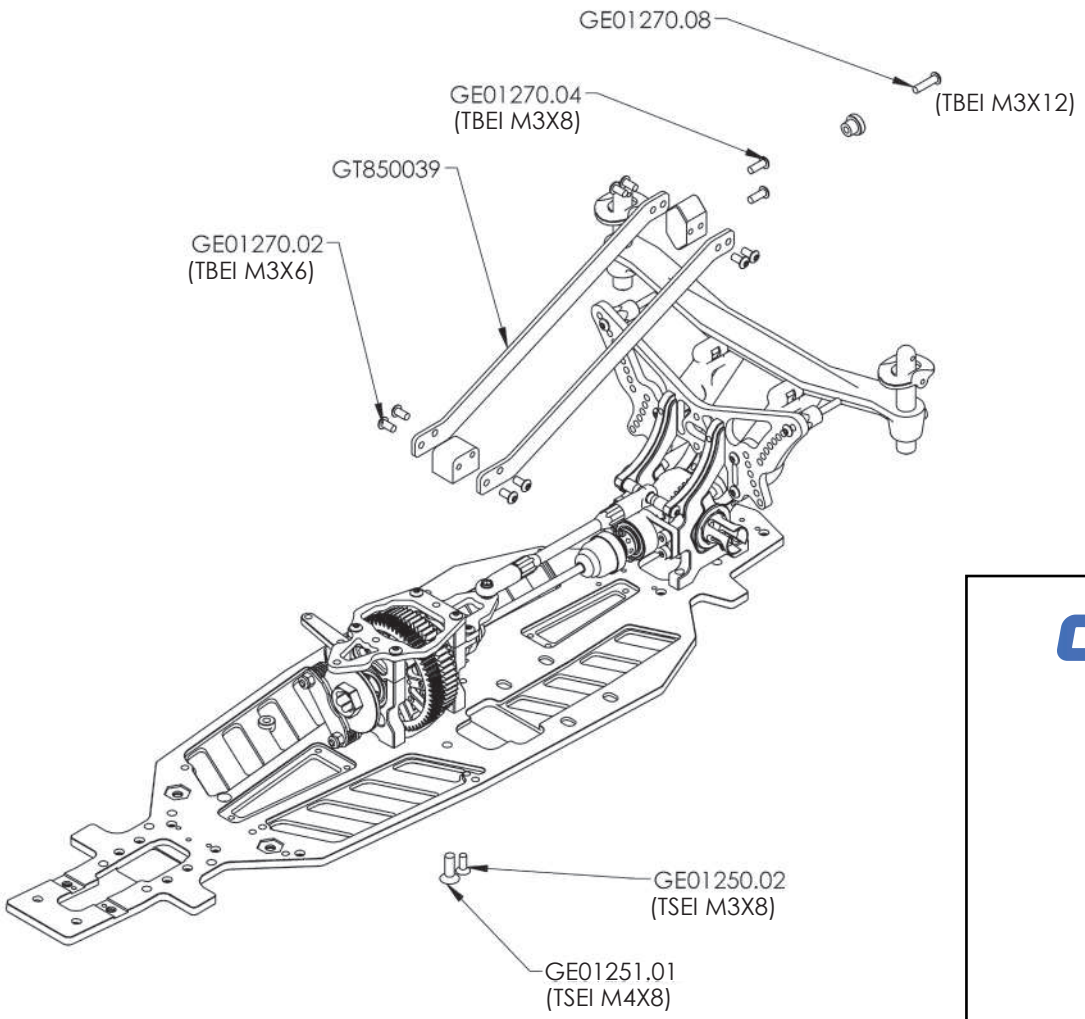


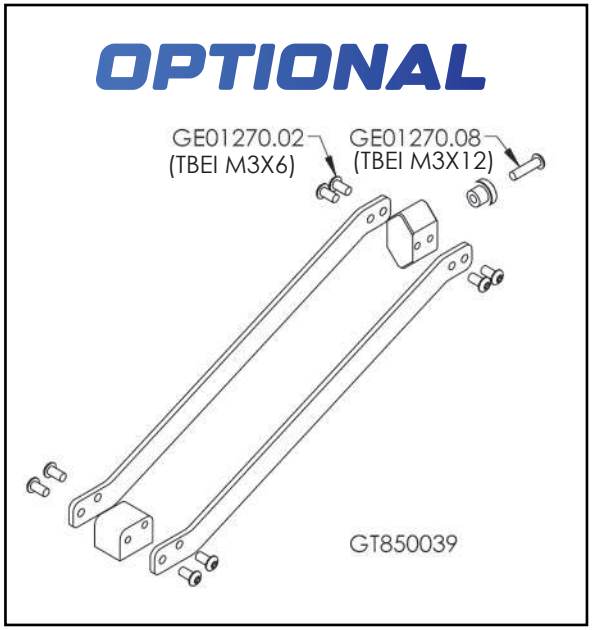

# 18. FRONT BULKHEAD

GTC8.25

## NITRO + ECO

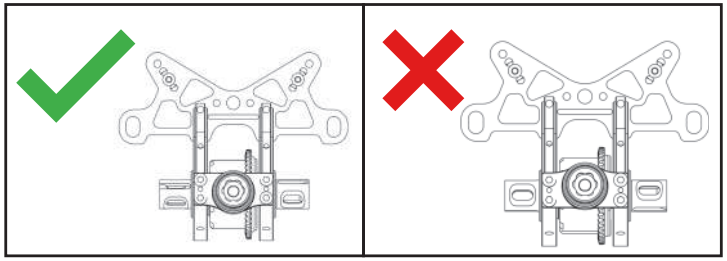

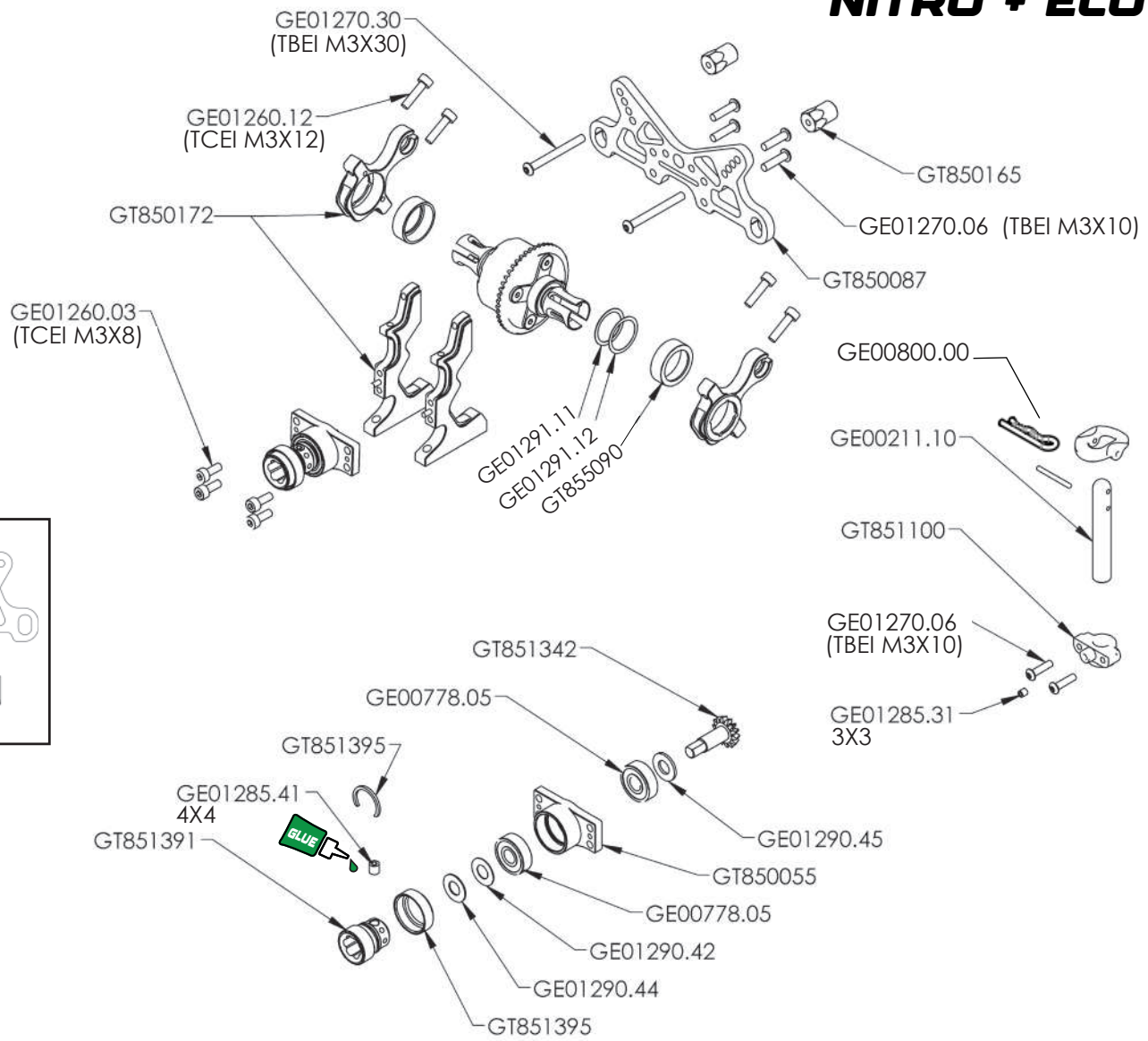

# 19. FRONT BALL DRIVE

GTC8.25

**NITRO + ECO**

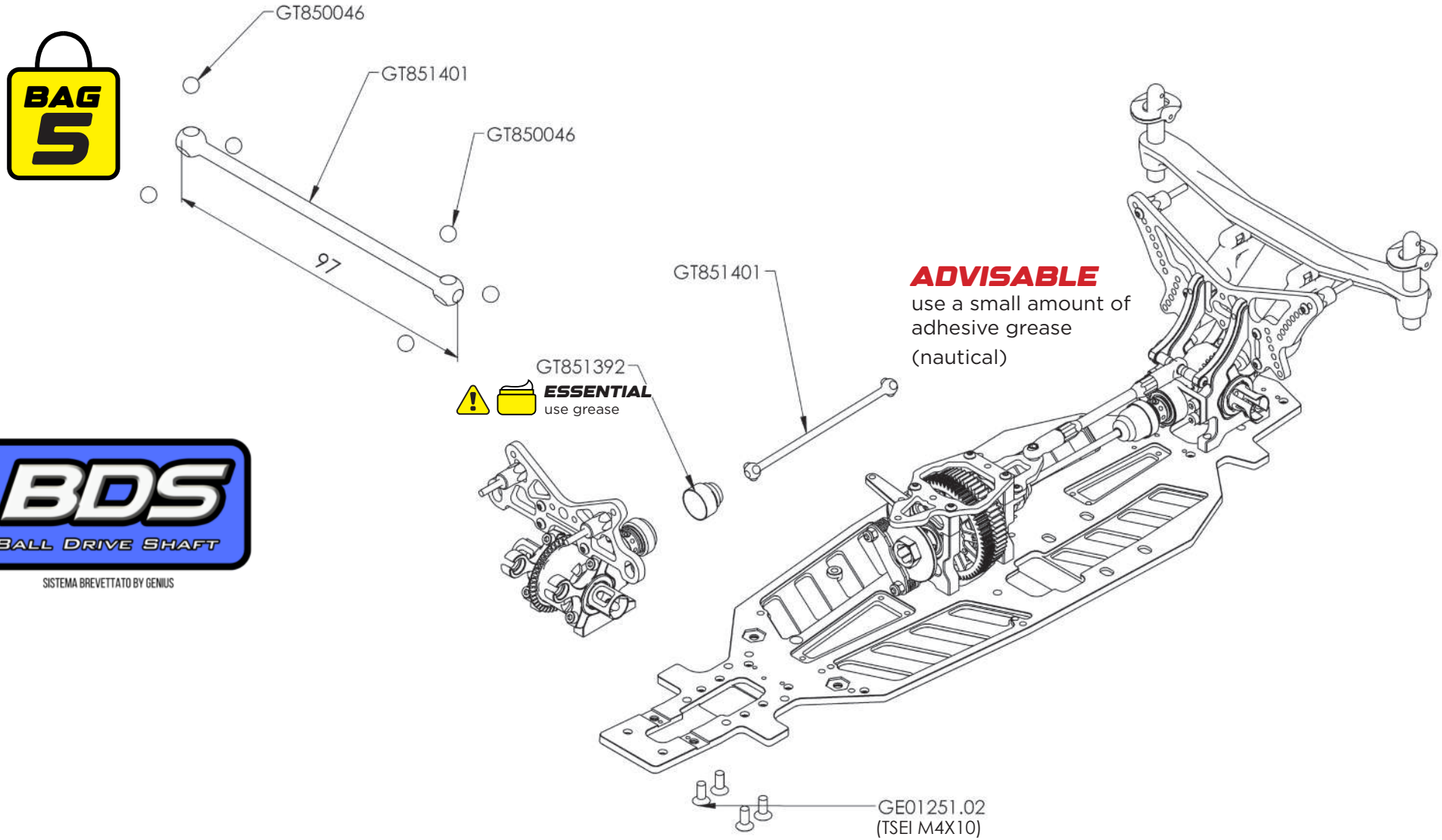


BDS
BALL DRIVE SHAFT
SISTEMA BREVETTATO BY GENIUS

# 20. LOWER SUSPENSION ARM REAR

GTC8.25

**NITRO + ECO**

BAG 7

LEFT SIDE

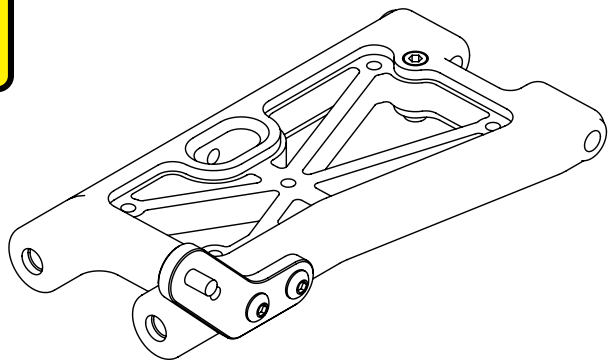

RIGHT SIDE

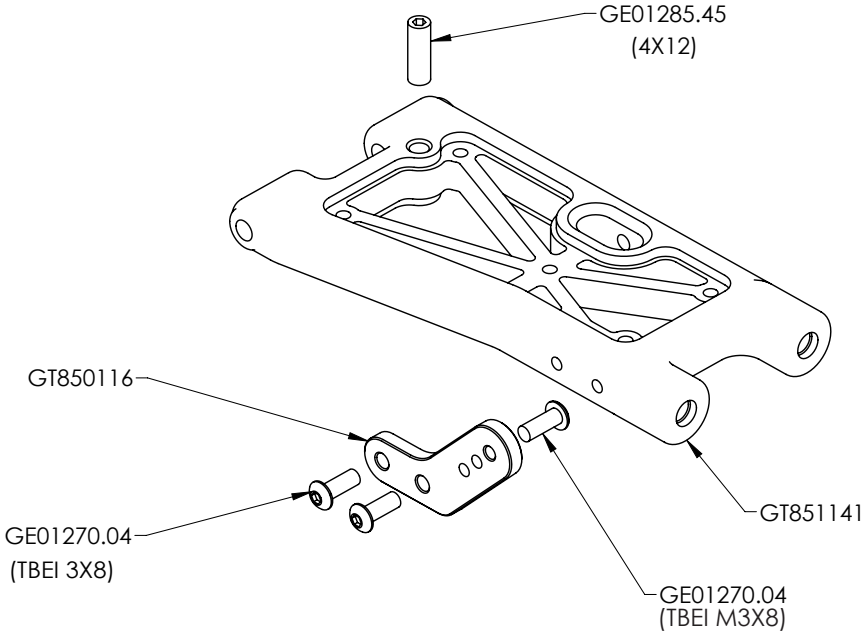


| OPTION | OPTION | OPTION |
|---|---|---|
| GRAPHITE INSERT REAR LOWER ARM | GRAPHITE SHOCK EXTENTION | ALU REAR LOWER SUSPENSION ARM |
| GT851142 | GT850117 | GT851135 |
| 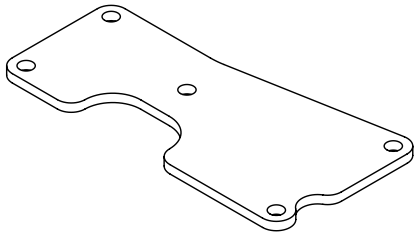 | 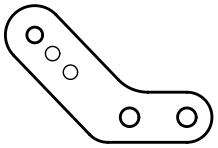 | 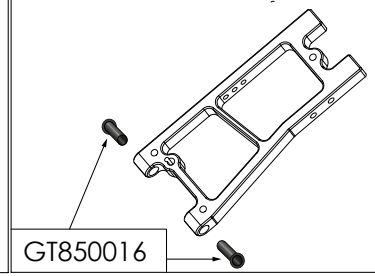 GT850016 |

# 21. REAR UPRIGHT

GTC8.25

## NITRO + ECO

BAG 7

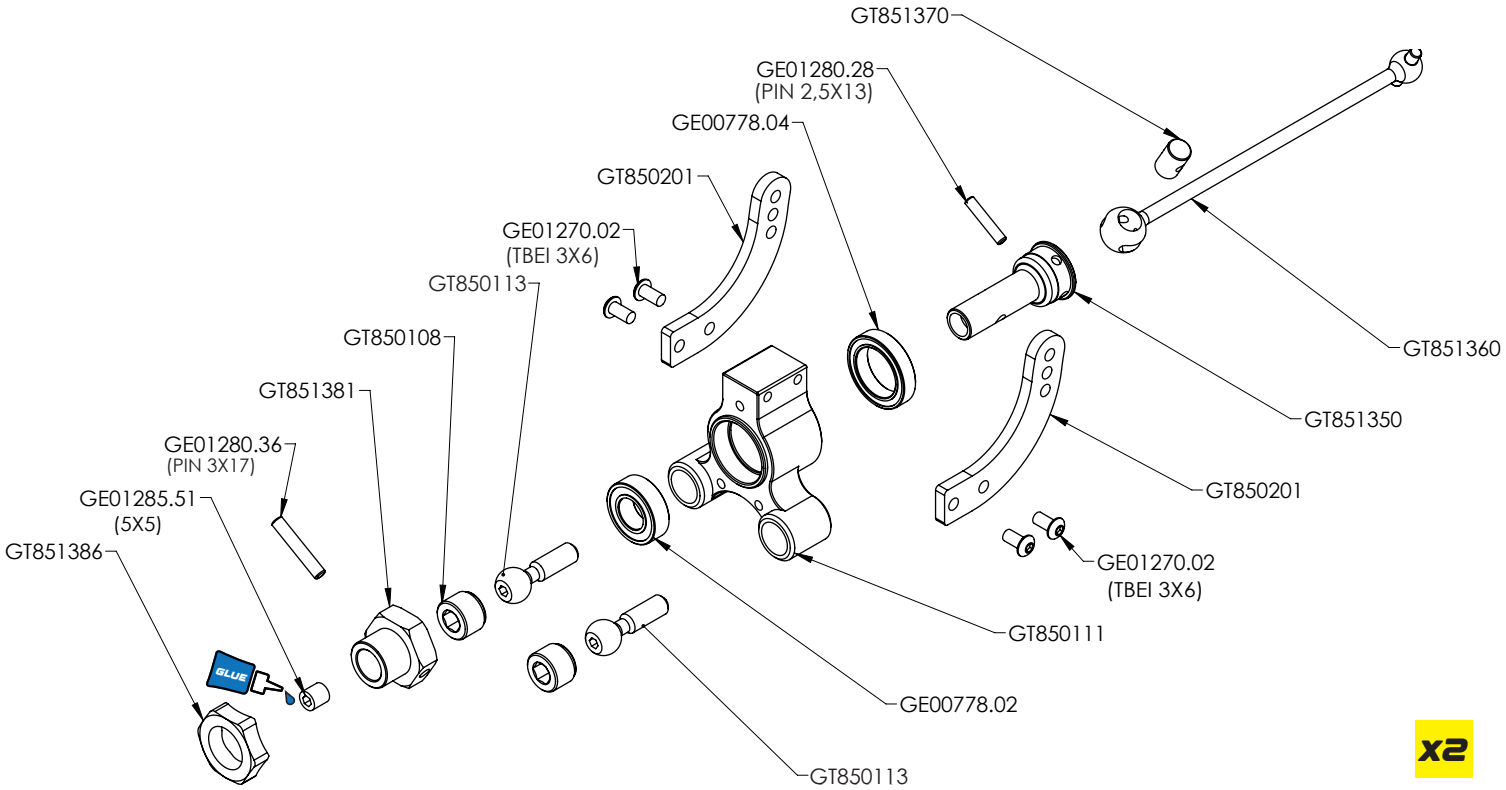


x2

## OPTION

| OPTION |
|---|
| ALUMINIUM |
| GT851351 |

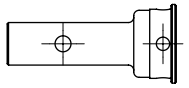

| WISHBONE ERGAL REAR | | WISHBONE PLASTIC REAR | |
|---|---|---|---|
| STEEL | TITAN | STEEL | TITAN |
| 23,5 mm | 23,5 mm | 28,5 mm | 28,5 mm |
| GT850109 | GT850112 | GT850113 | GT850114 |

| OPTIONS | | |
|---|---|---|
| GT851381 | GT851382 | GT851383 |
| 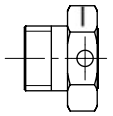 | 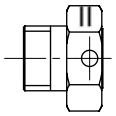 | 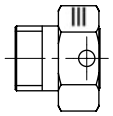 |
| +1 | +2 | +3 |

# 22. REAR ROLLBAR ARMS

GTC8.25

**NITRO + ECO**

BAG 7

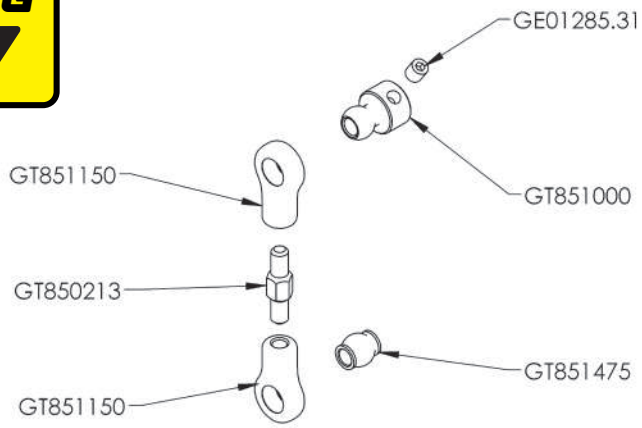


**OPTION**

ALU - GT850215

TITAN - GT850214

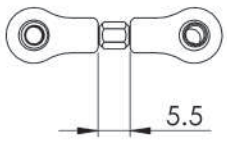


**STANDARD SETTING**

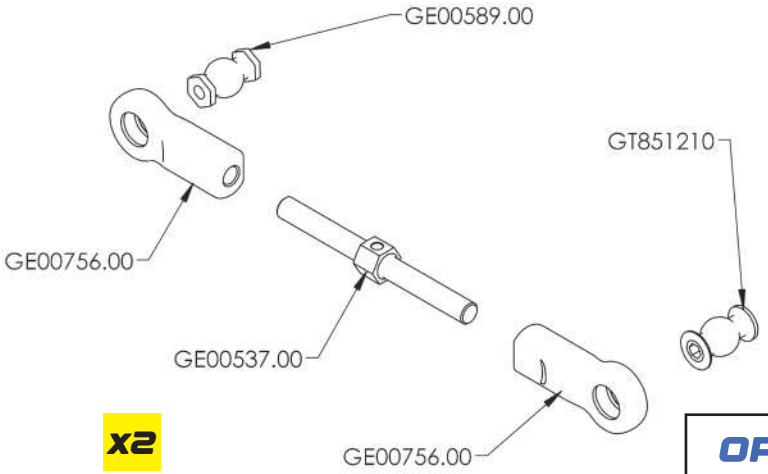


x2

**OPTION**

GE00537.01

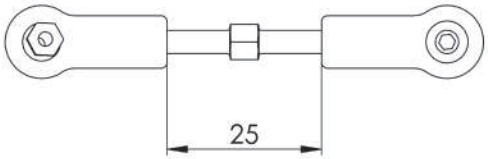


**STANDARD SETTING**

# 23. REAR UPRIGHT & ARMS

GTC8.25

NITRO + ECO

BAG 7

## LEFT SIDE

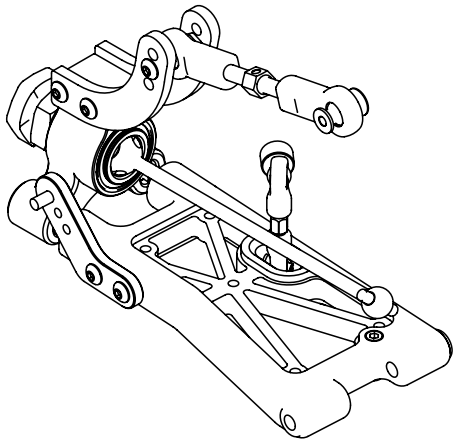

## RIGHT SIDE

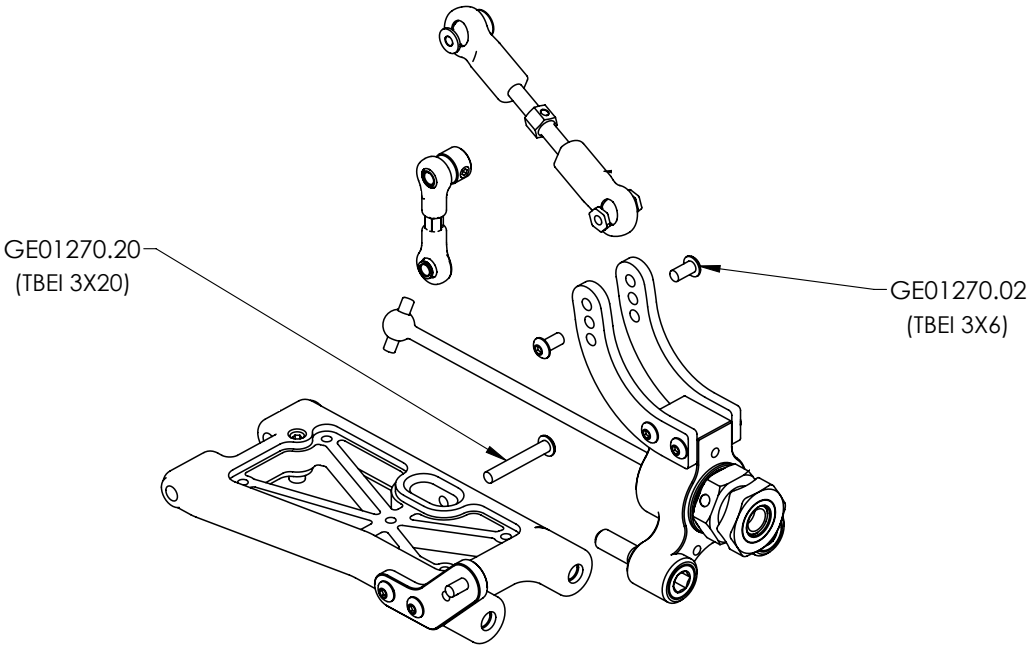

# 24. REAR ANTI ROLL BAR

GTC8.25

## NITRO + ECO

BAG 7

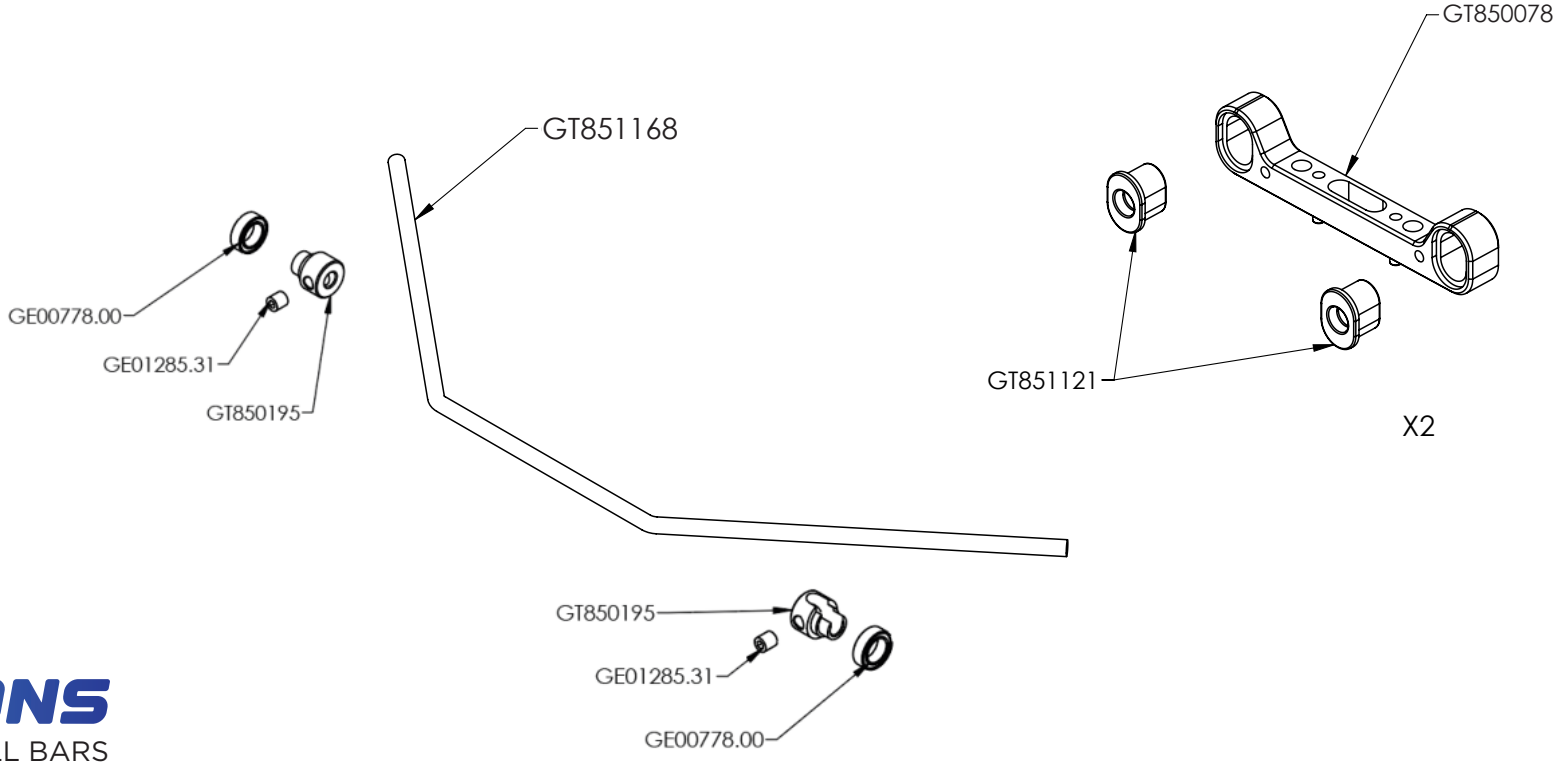


## OPTIONS

REAR ANTI ROLL BARS

| | |
|---|---|
| GT851166 | Ø 2,6 mm |
| GT851167 | Ø 2,7 mm |
| GT851168 | Ø 2,8 mm |
| GT851169 | Ø 2,9 mm |
| GT851170 | Ø 3.0 mm |
| GT851171 | Ø 3.1 mm |
| GT851172 | Ø 3.2 mm |

| SET GT851121 | |
|---|---|
| X4 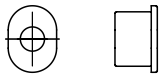 | 0 |
| X4 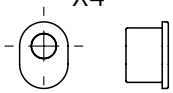 | +1.5 |

# 25. REAR ASSEMBLING

GTC8.25

**NITRO + ECO**

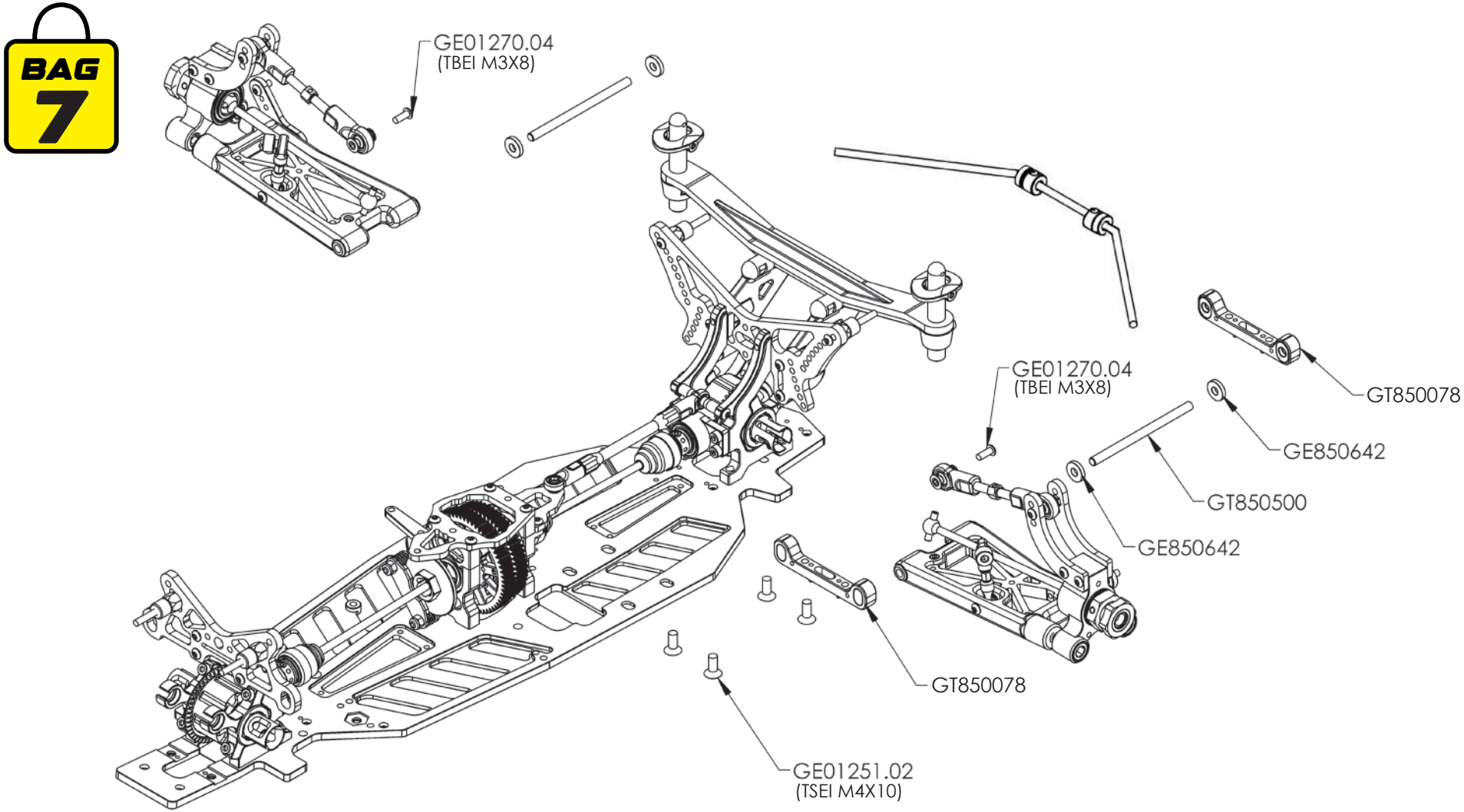

# 26. LOWER SUSPENSION ARMS FRONT

GTC8.25

NITRO + ECO

BAG 8

## LEFT SIDE

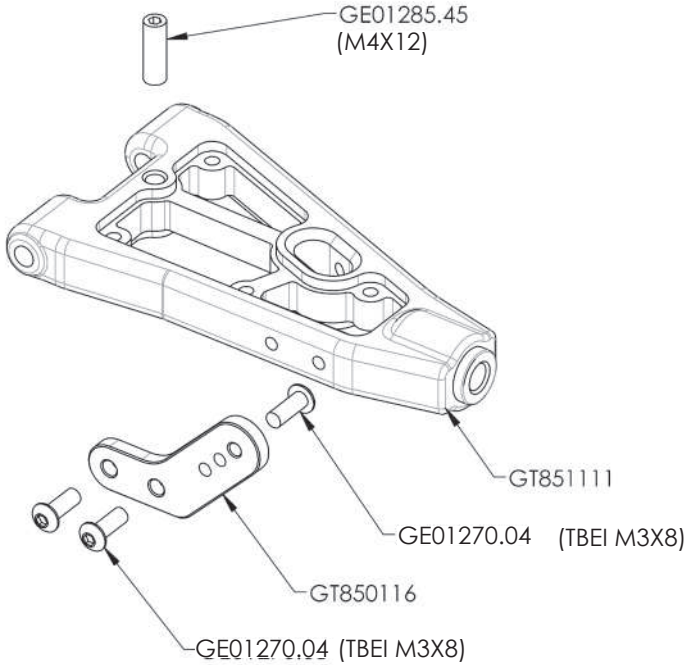


## RIGHT SIDE

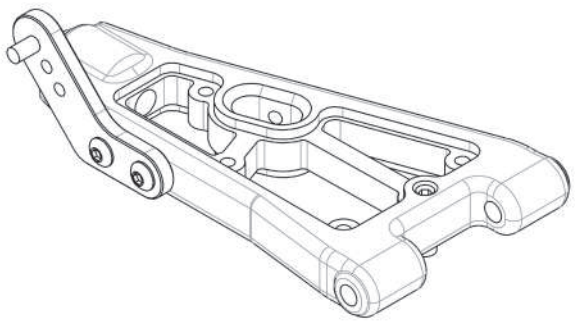

| OPTIONS | OPTIONS | OPTIONS |
|---|---|---|
| GRAPHITE INSERT FRONT LOWER ARM | GRAPHITE SHOCK EXTENTION | ALU FRONT LOWER SUSPENSION ARM |
| GT851112 | GT850117 | GT851109 |
| | | 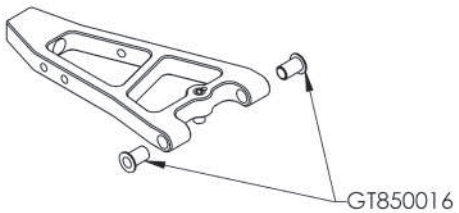  |

# 27. FRONT ANTI ROLL BAR

GTC8.25

**NITRO + ECO**

BAG 8

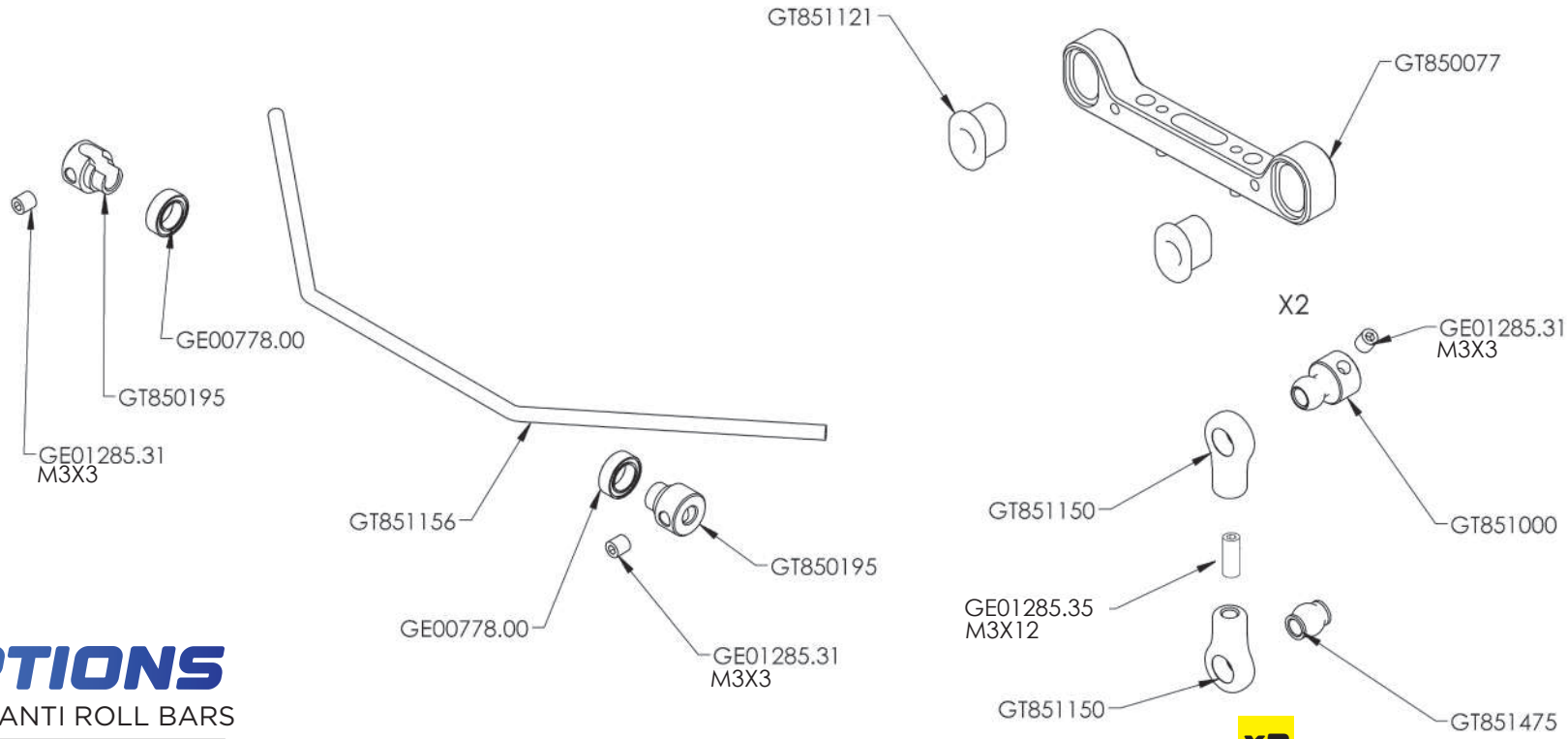


## OPTIONS

FRONT ANTI ROLL BARS

| | |
|---|---|
| GT851154 | Ø 2,4 mm |
| GT851155 | Ø 2,5 mm |
| GT851156 | Ø 2,6 mm |
| GT851157 | Ø 2,7 mm |
| GT851158 | Ø 2.8 mm |
| GT851159 | Ø 2.9 mm |
| GT851160 | Ø 3.0 mm |

## OPTION

ALU - GT850215
TITAN - GT850214

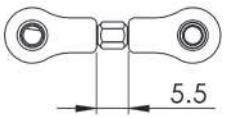


STANDARD SETTING

X2

| | |
|---|---|
| X4 | 0 |
| X4 | +1.5 |

**SET**
GT851521

# 28. FRONT UPRIGHT

## NITRO + ECO

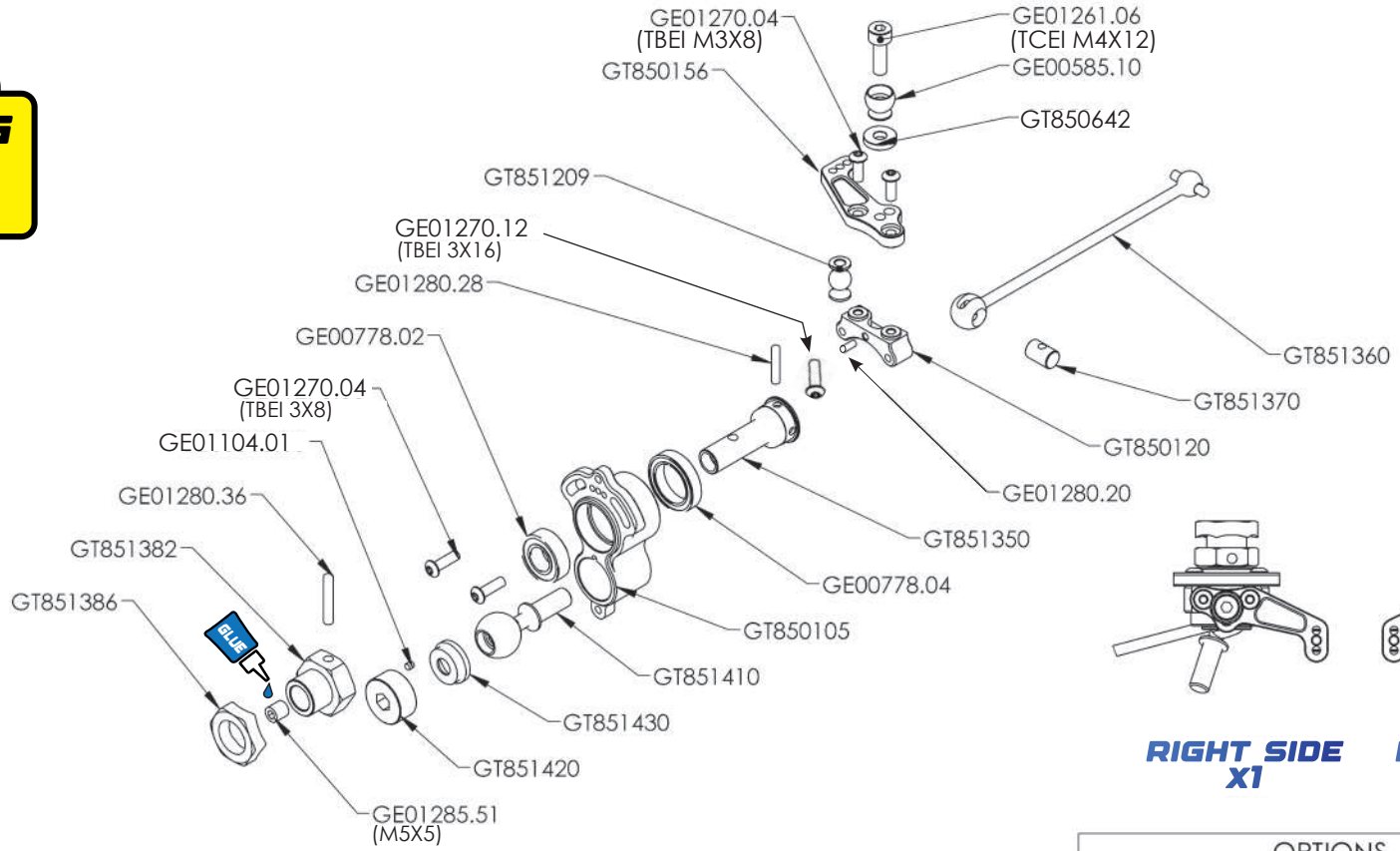


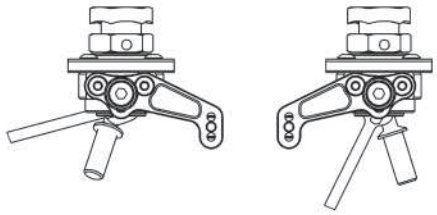

**RIGHT SIDE X1** **LEFT SIDE X1**

**OPTION ALUMINUM**

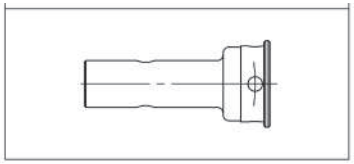

GT851351

| OPTIONS | | |
|---|---|---|
| 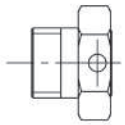 | 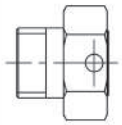 | 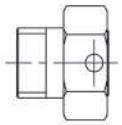 |
| +1 | +2 | +3 |
| GT851381 | GT851382 | GT851383 |

# 29. LOWER SUSPENSION ARM FRONT MOUNTING

GTC8.25

**NITRO + ECO**

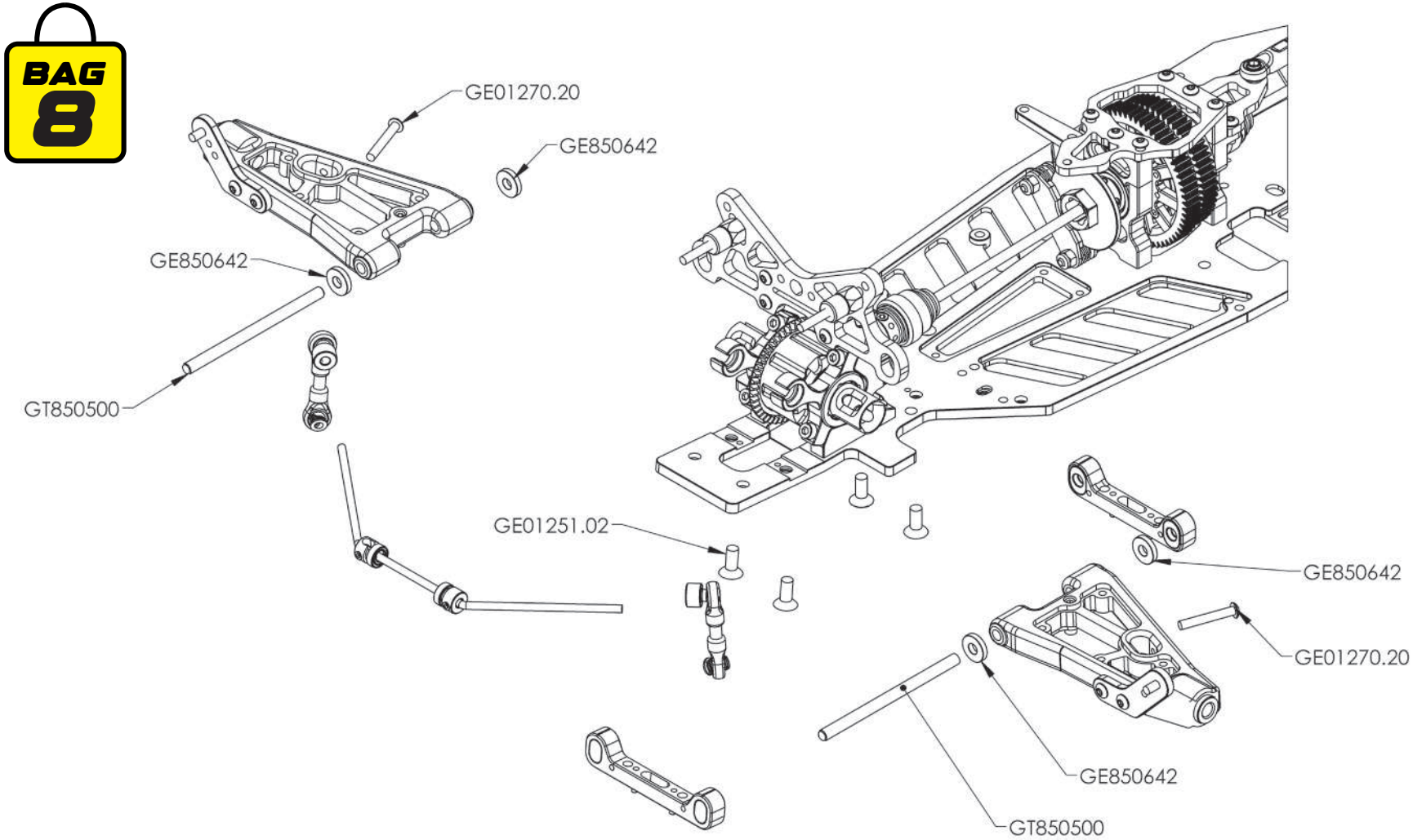

# 30. ASSEMBLING FRONT UP ARMS

GTC8.25

**NITRO + ECO**

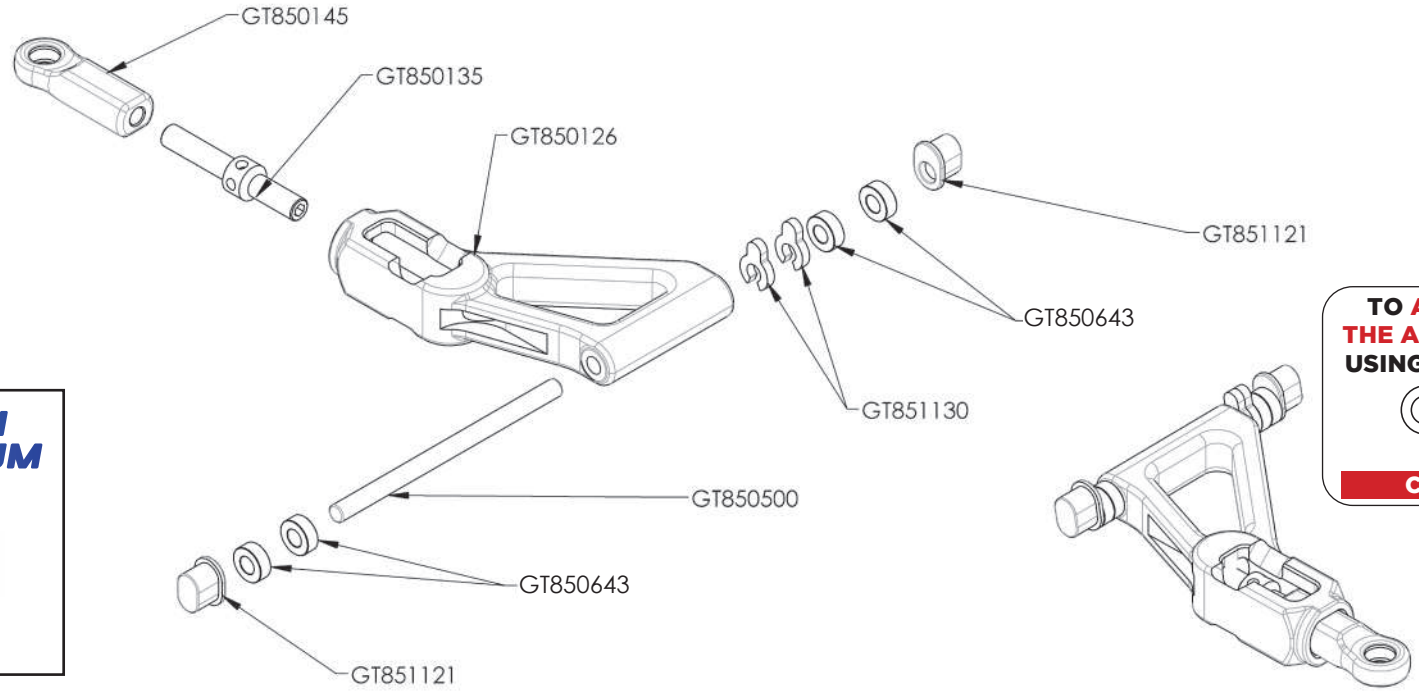


**OPTION ALUMINUM**
GT850136

TO ADJUST THE PLAY IN THE ARM WE RACCOMMEND USING THE SUPPLIED SHIMS

4X8X0,5

CODE: GE01290.24

**X2**

| GT851130 | |
|---|---|
| SPACERS SET | |
| 2mm | 1mm |

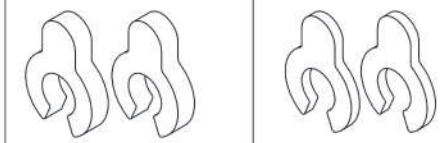

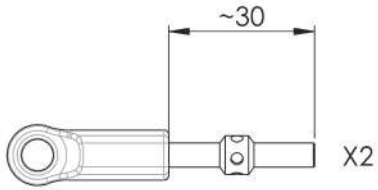


**PREMOUNTING SET**

| SET GT851121 | |
|---|---|
| X4 | 0 |
| X4 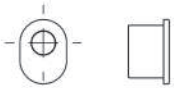 | +1.5 |

GTC8.25

NITRO + ECO

BAG 6

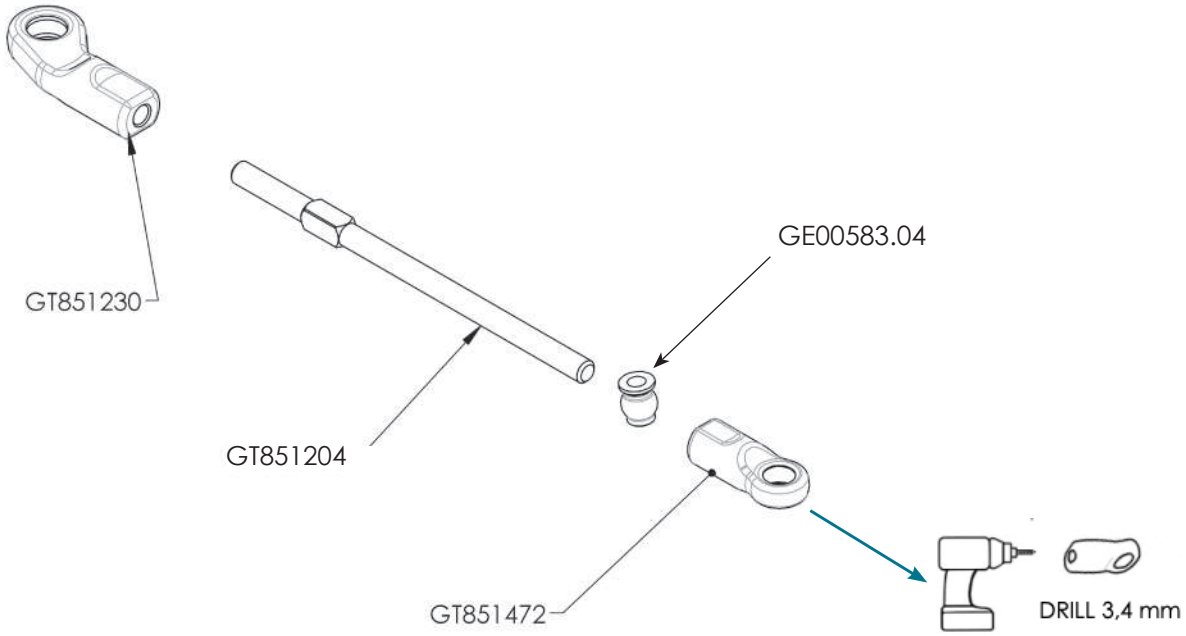


## GT851204

ADJ. TURNBUNKLE M4 L/R
**81 MM** EXA 4 (2)

## GT851205

ADJ. TURNBUNKLE ALU M4 L/R
**81 MM** EXA 4 (2)

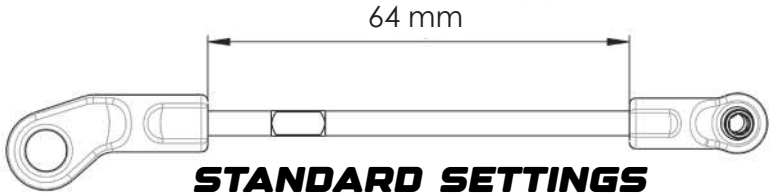


STANDARD SETTINGS

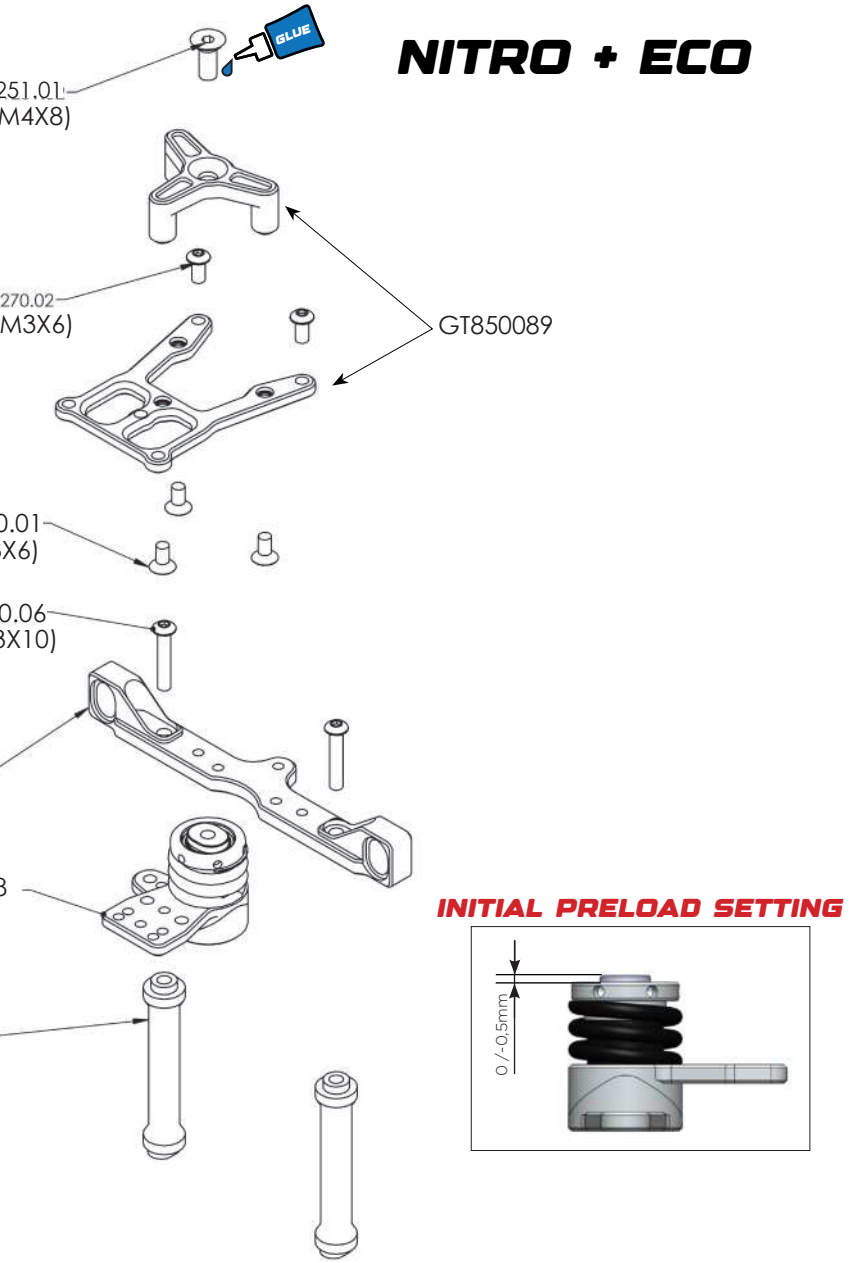


BAG 6

GT851178

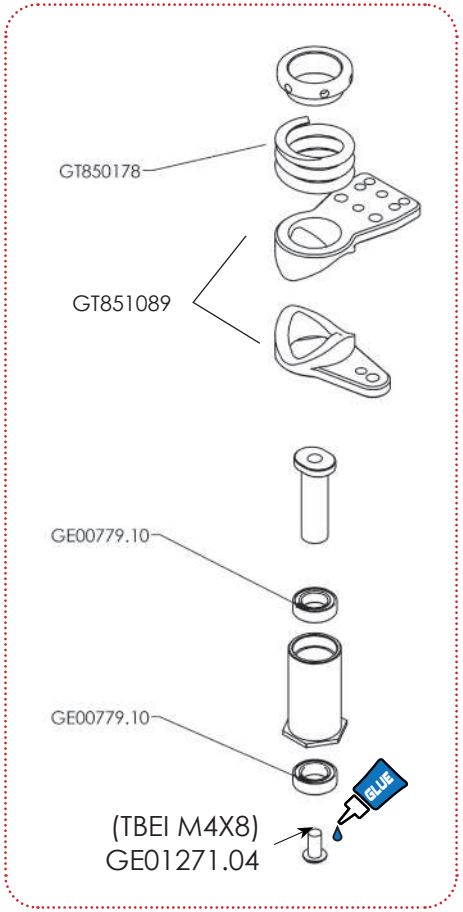

# 33. FRONT ASSEMBLING

GTC8.25

**NITRO + ECO**

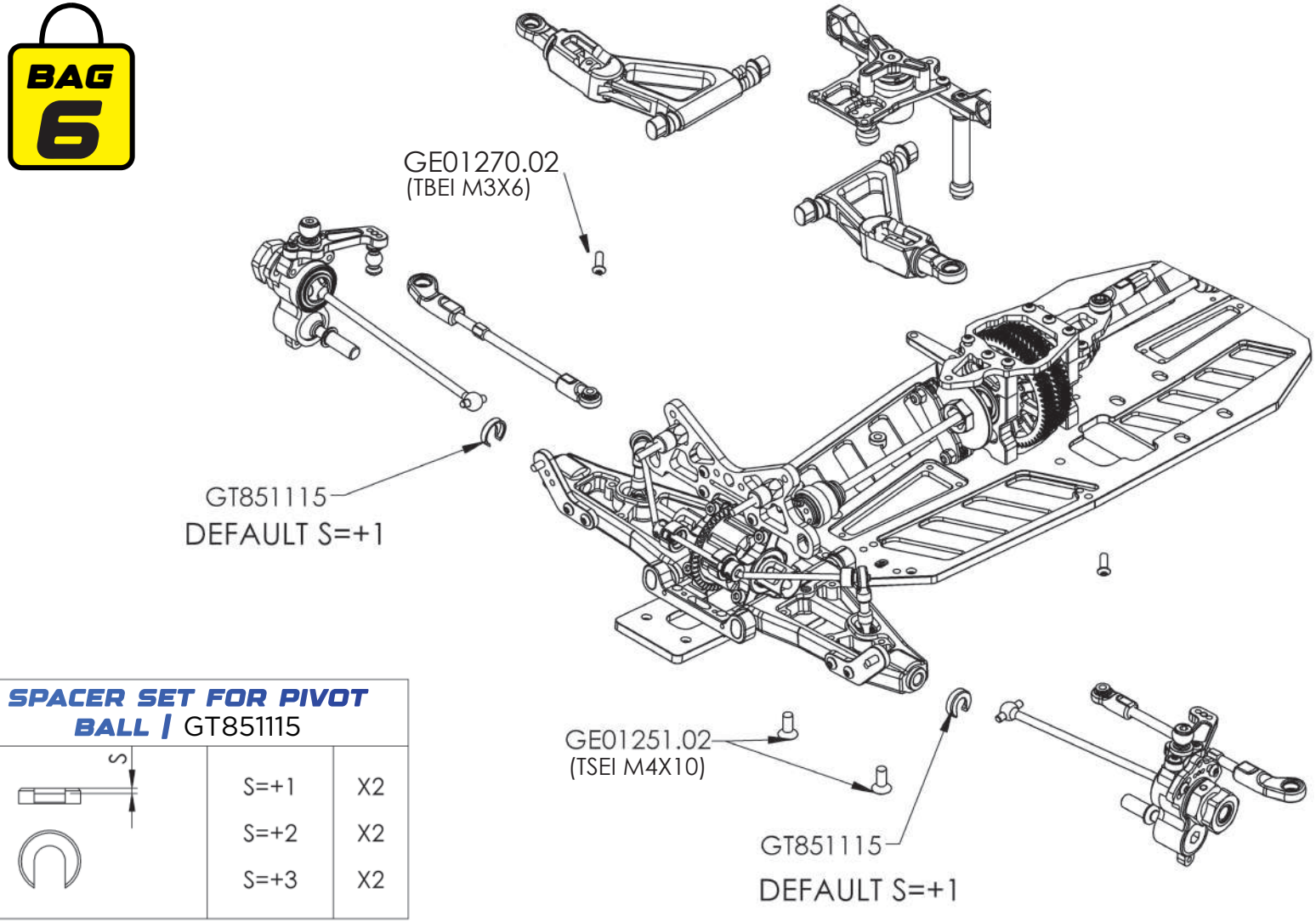


| SPACER SET FOR PIVOT BALL \| GT851115 | | |
|---|---|---|
|  | S=+1 | X2 |
| | S=+2 | X2 |
| | S=+3 | X2 |

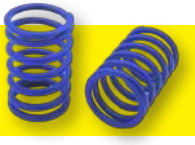

# KIT SPRINGS

GT858000 - SHOCK SPRINGS SET (10)

GT858001 - SHOCK SPRINGS SET KIT LINEAR (8)

GT858001 - SHOCK SPRINGS SET KIT PROGESSIVE (5)

# SILICONE OILS

| CODE | CST | ML |
|---|---|---|
| GE04000.30 | 300 | 60 |
| GE04000.40 | 400 | 60 |
| GE04000.50 | 500 | 60 |
| GE04000.60 | 600 | 60 |
| GE04000.70 | 700 | 60 |
| GE04000.80 | 800 | 60 |
| GE04001.00 | 1000 | 60 |
| GE04002.00 | 2000 | 60 |
| GE04003.00 | 3000 | 60 |
| GE04004.00 | 4000 | 60 |

| | | |
|---|---|---|
| GE04005.00 | 5000 | 60 |
| GE04006.00 | 6000 | 60 |
| GE04007.00 | 7000 | 60 |
| GE04008.00 | 8000 | 60 |
| GE04009.00 | 9000 | 60 |
| GE04010.00 | 10K | 60 |
| GE04020.00 | 20K | 60 |
| GE04030.00 | 30K | 60 |
| GE04050.00 | 50K | 60 |
| GE04060.00 | 60K | 60 |
| GE04100.00 | 100K | 60 |
| GE04200.00 | 200K | 60 |

| | | |
|---|---|---|
| GE04300.00 | 300K | 60 |
| GE04500.00 | 500K | 60 |
| GE04990.00 | 1MLN | 60 |

# 35. SPRINGS LIST

| GT8 & GENIUS XR4.22 | | 1:5 F1 & XR - XR4 EVO |
|---|---|---|
| **LINEAR** | **PROGRESSIVE** | **BICONICAL** |
| SOFT | | SOFT |
| ORANGE GT858065 | | YELLOW GE00766.00 |
| | GOLD GT858080 | BLACK GE00768.00 |
| YELLOW GT858060 | | SILVER GE00759.01 |
| | PINK GT858082 | |
| RED GT858055 | | GREEN FLUO GE00769.04 |
| | PURPLE GT858085 | |
| WHITE GT858050 | | ORANGE GE00769.03 |
| | SILVER GT858090 | LIGHT BLUE GE00767.00 |
| DARK BLUE GT858070 | | GREEN GE00760.01 |
| BLUE GT858045 | | GOLD GE00761.01 |
| | OCRA GT858095 | |
| DARK GREY GT858075 | | RED GE00769.00 |
| | GREEN FLUO GT858100 | WHITE GE00769.01 |
| BLACK GT858040 | | PINK GE00769.02 |
| HARD | | HARD |

GTC8.25

NITRO + ECO

BAG 12

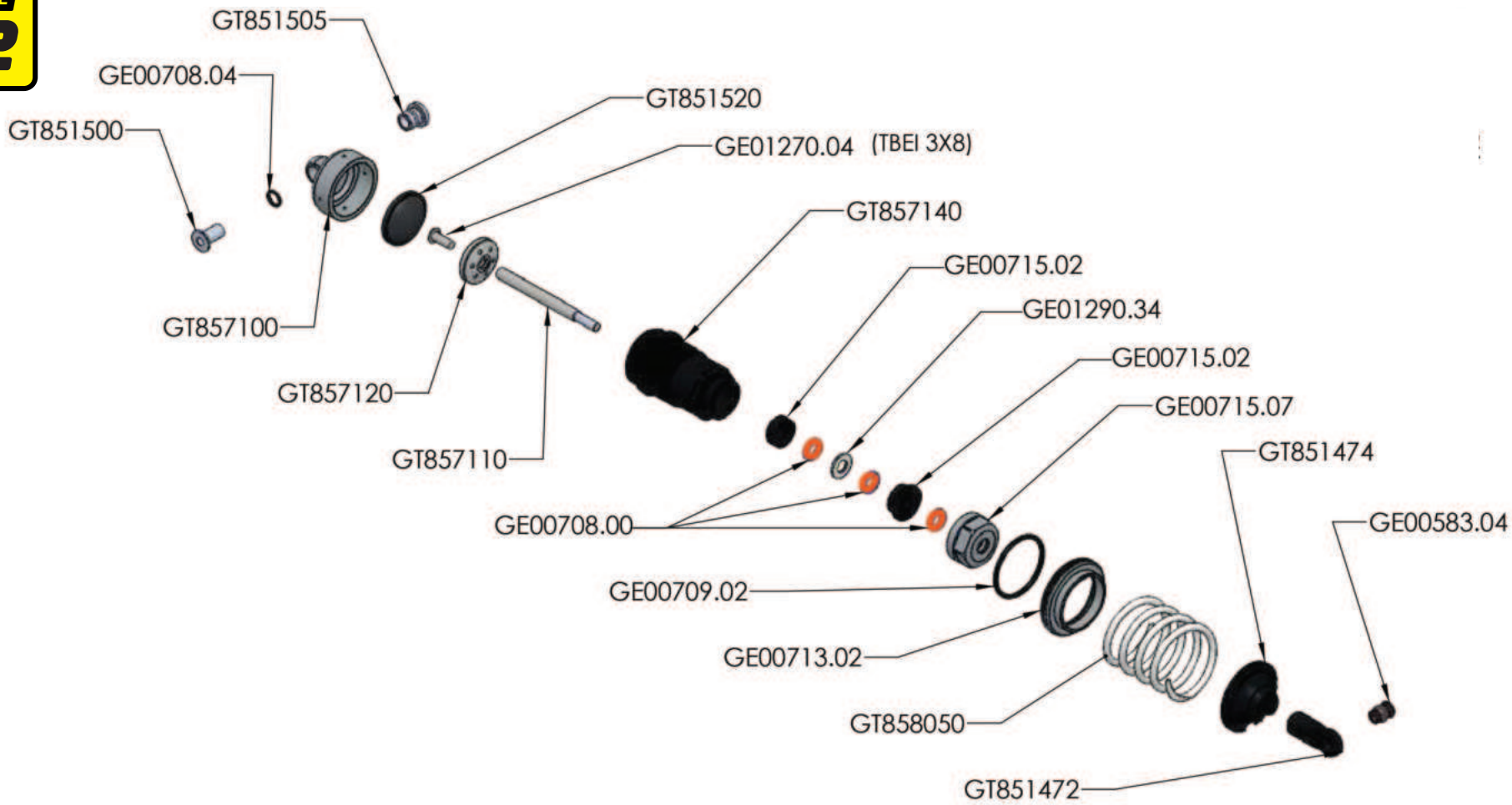

NITRO + ECO

## OPTIONAL

## GT850049

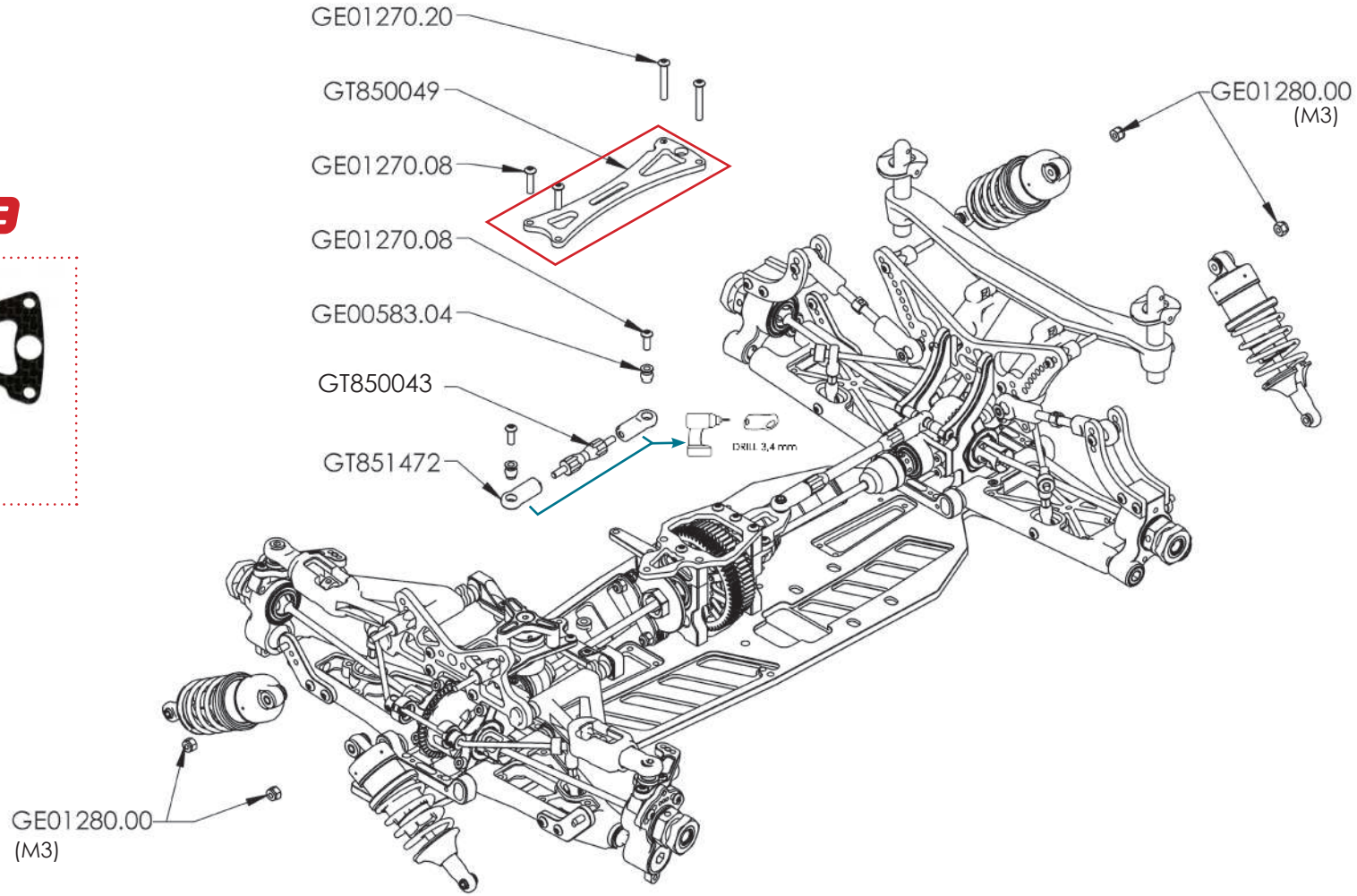

# 38. FRONT BAUMPER ASSEMBLING

GTC8.25

**NITRO + ECO**

BAG 10

**OPTION**
carbon

GT850161

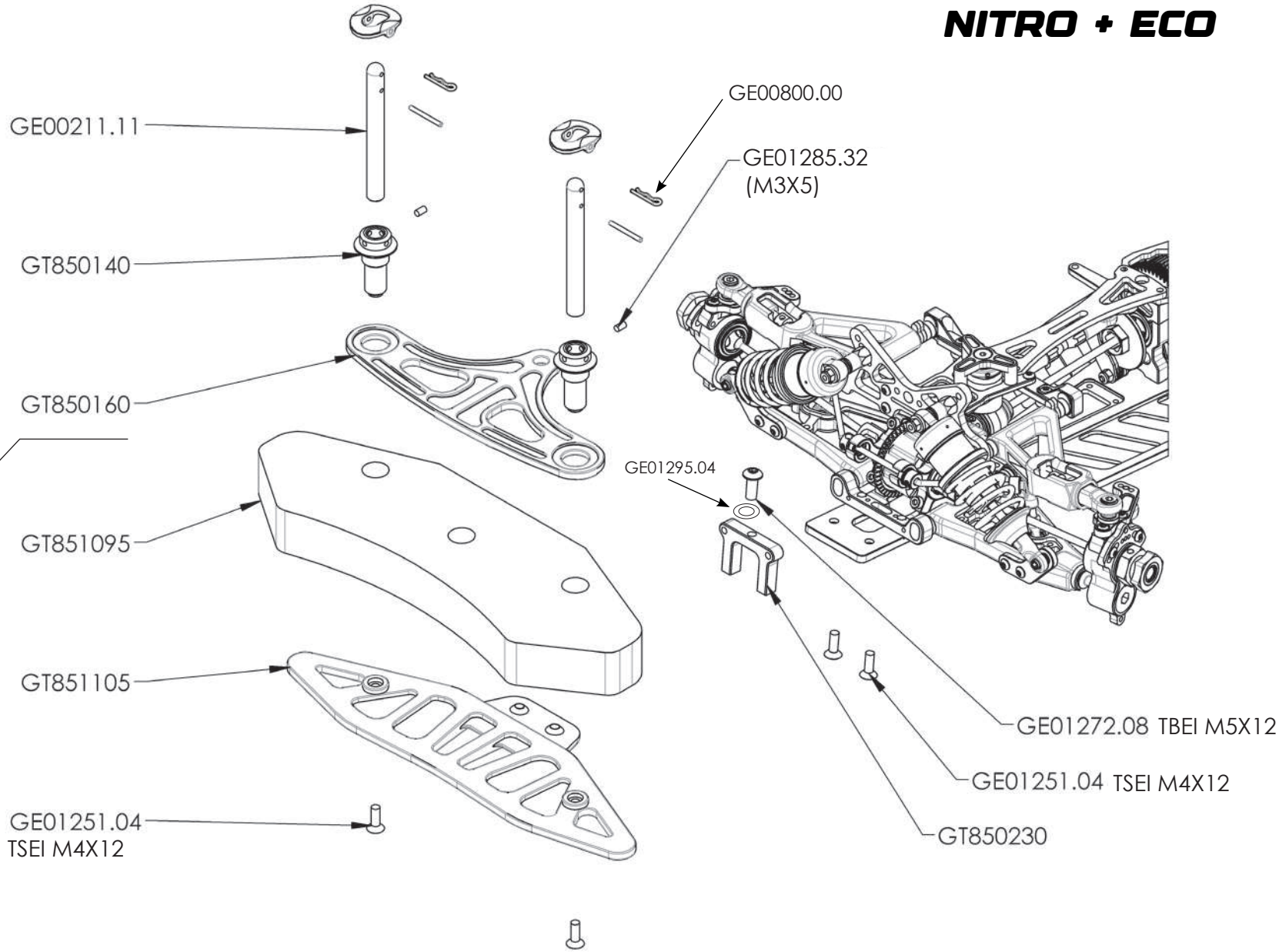

# 39. GAS BRAKES ARMS

NITRO

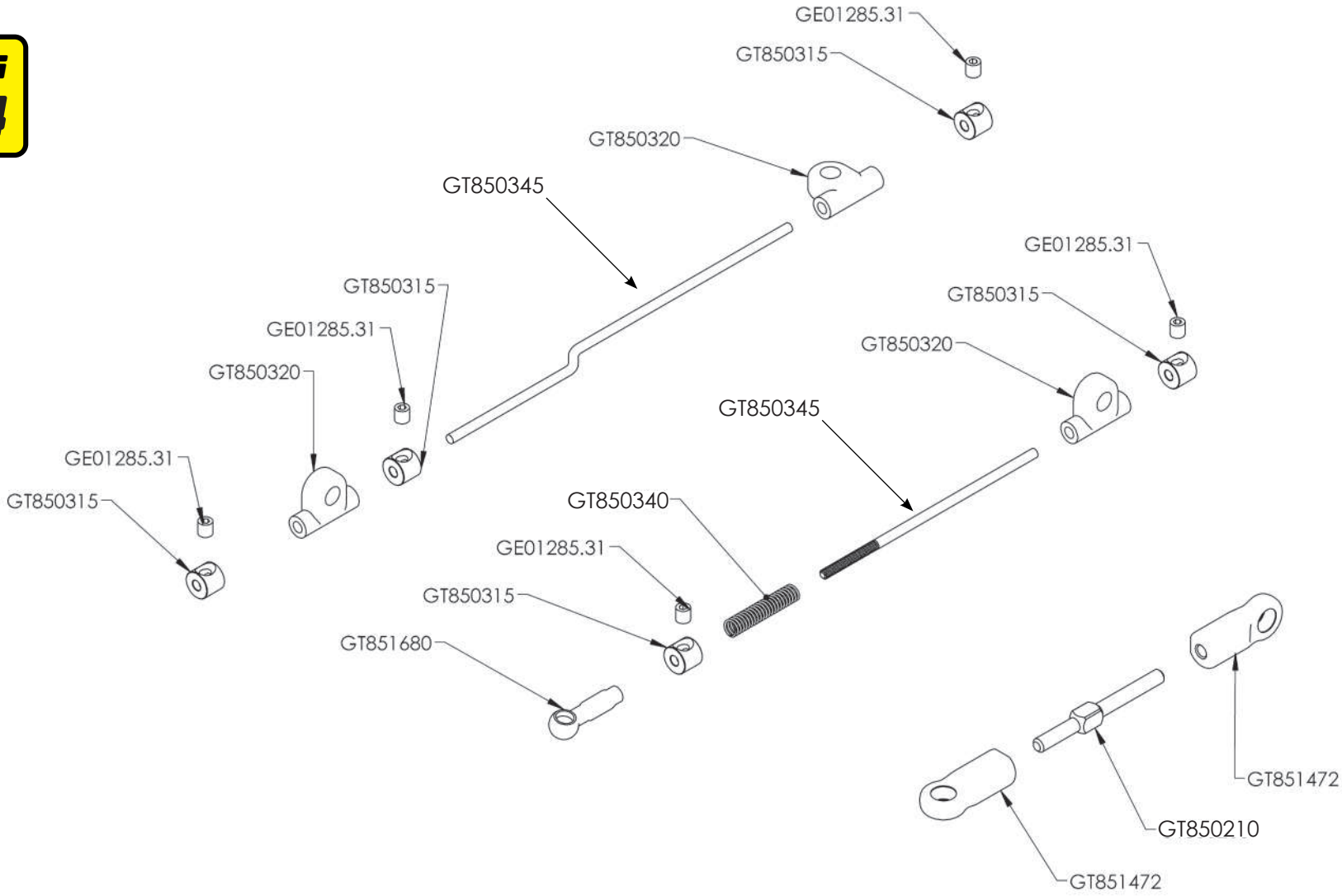

# 40. RADIO PLATE NITRO

GTC8.25

NITRO

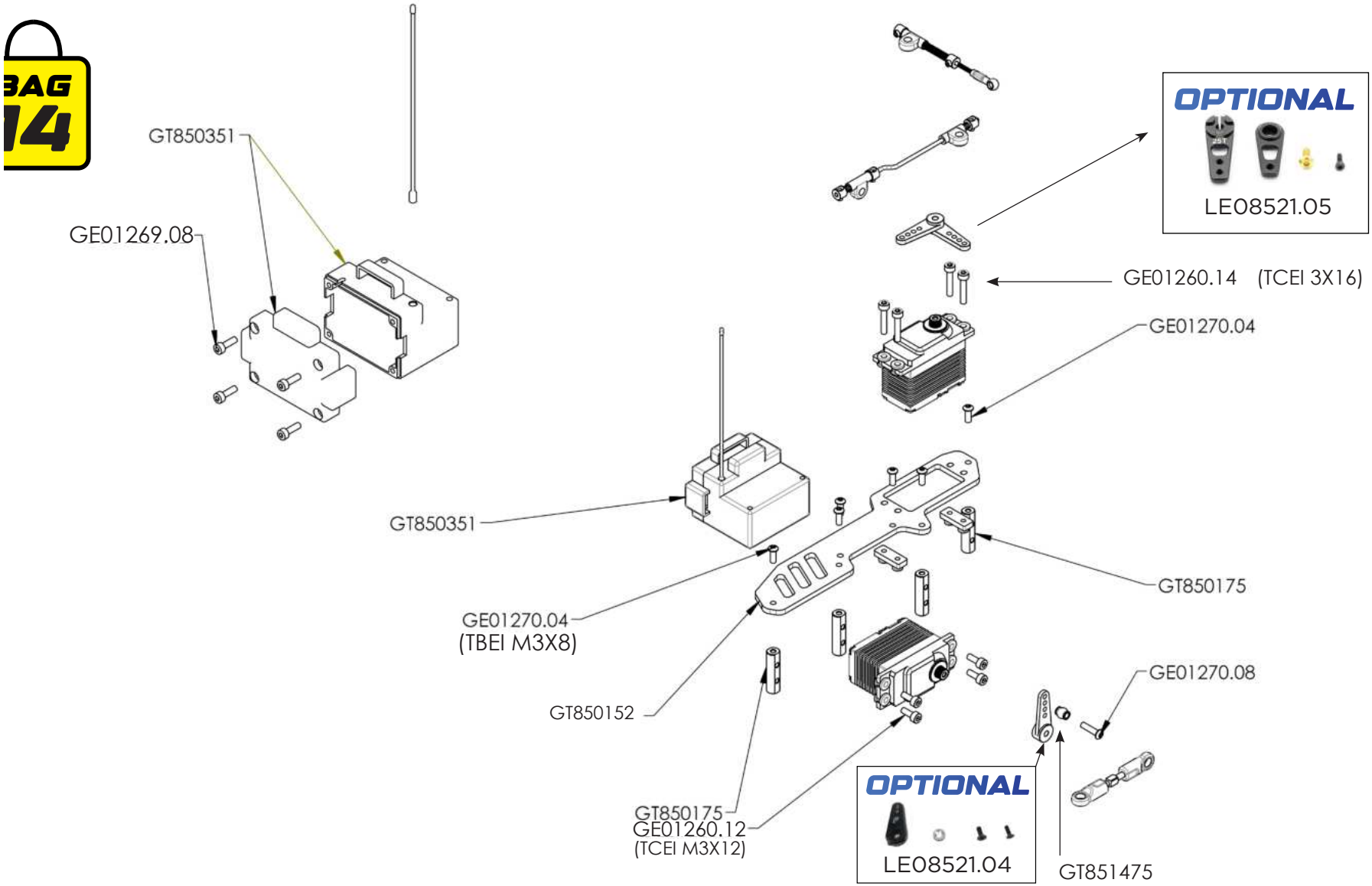

GTC8.25

NITRO

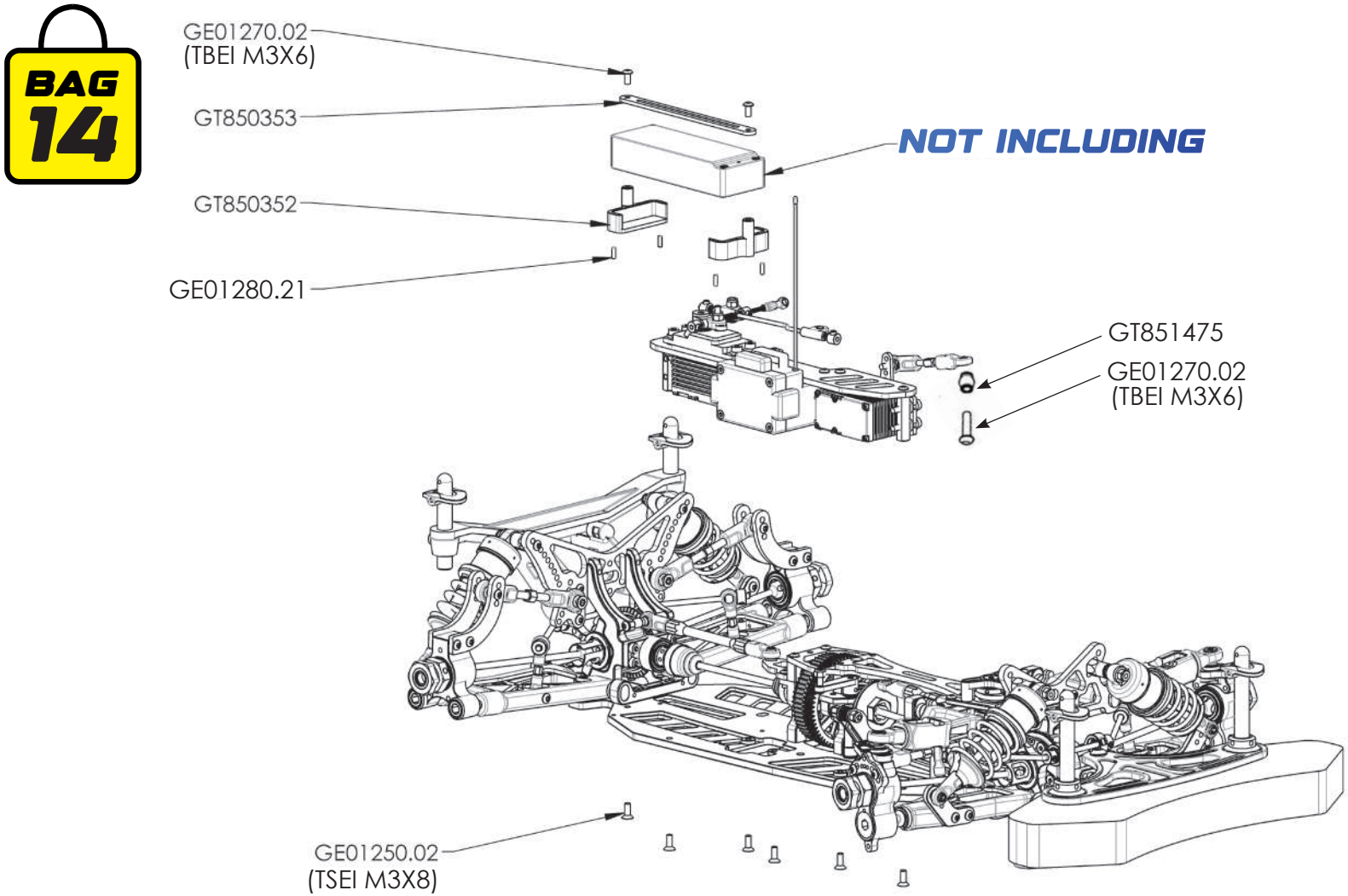

# 42. RADIO PLATE ECO

ECO

BAG 13

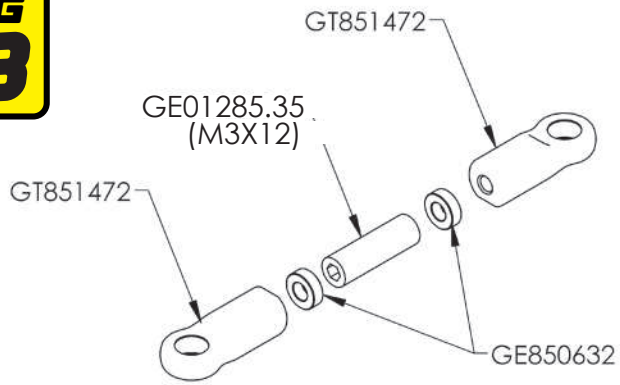


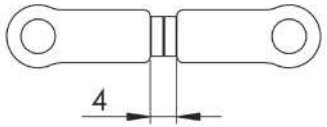


STANDARD SETTINGS

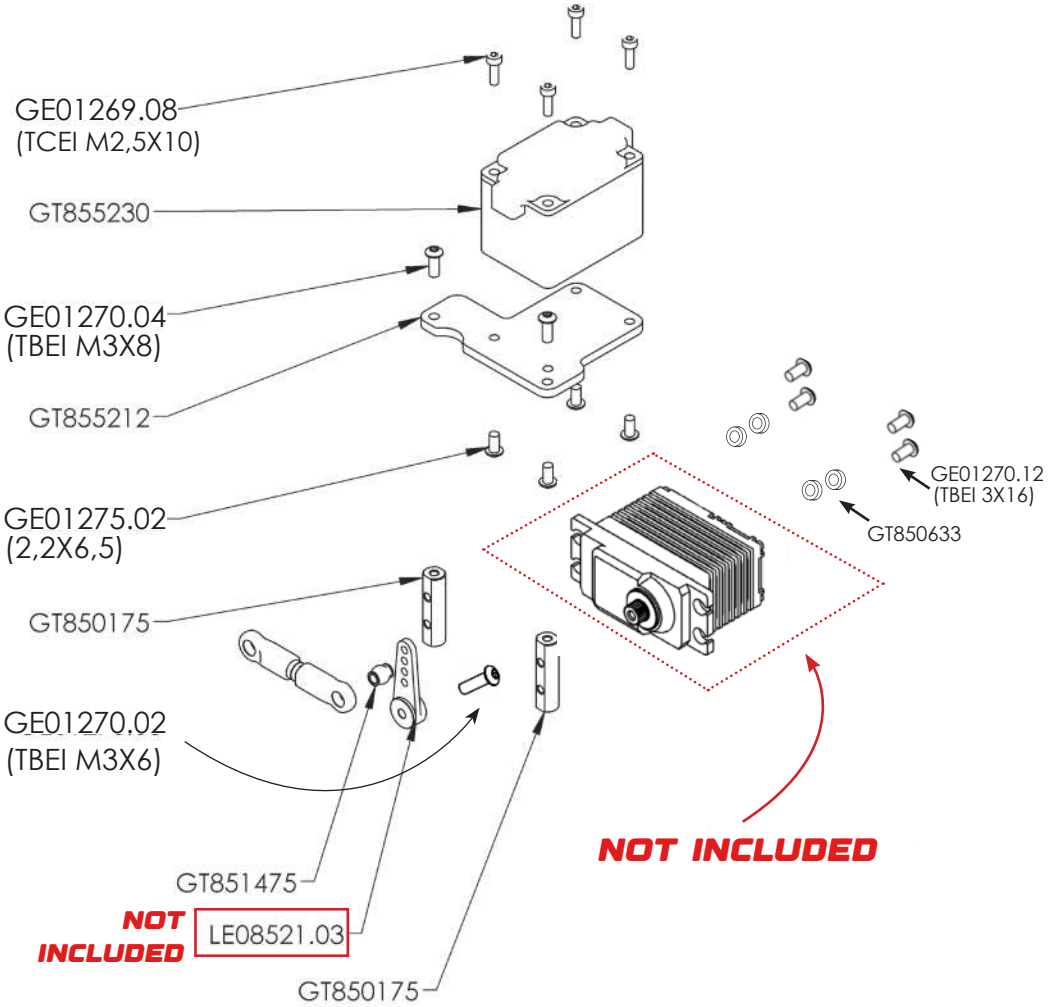

# 43. BATTERY & RADIO MOUNT

GTC8.25

ECO

BAG 13

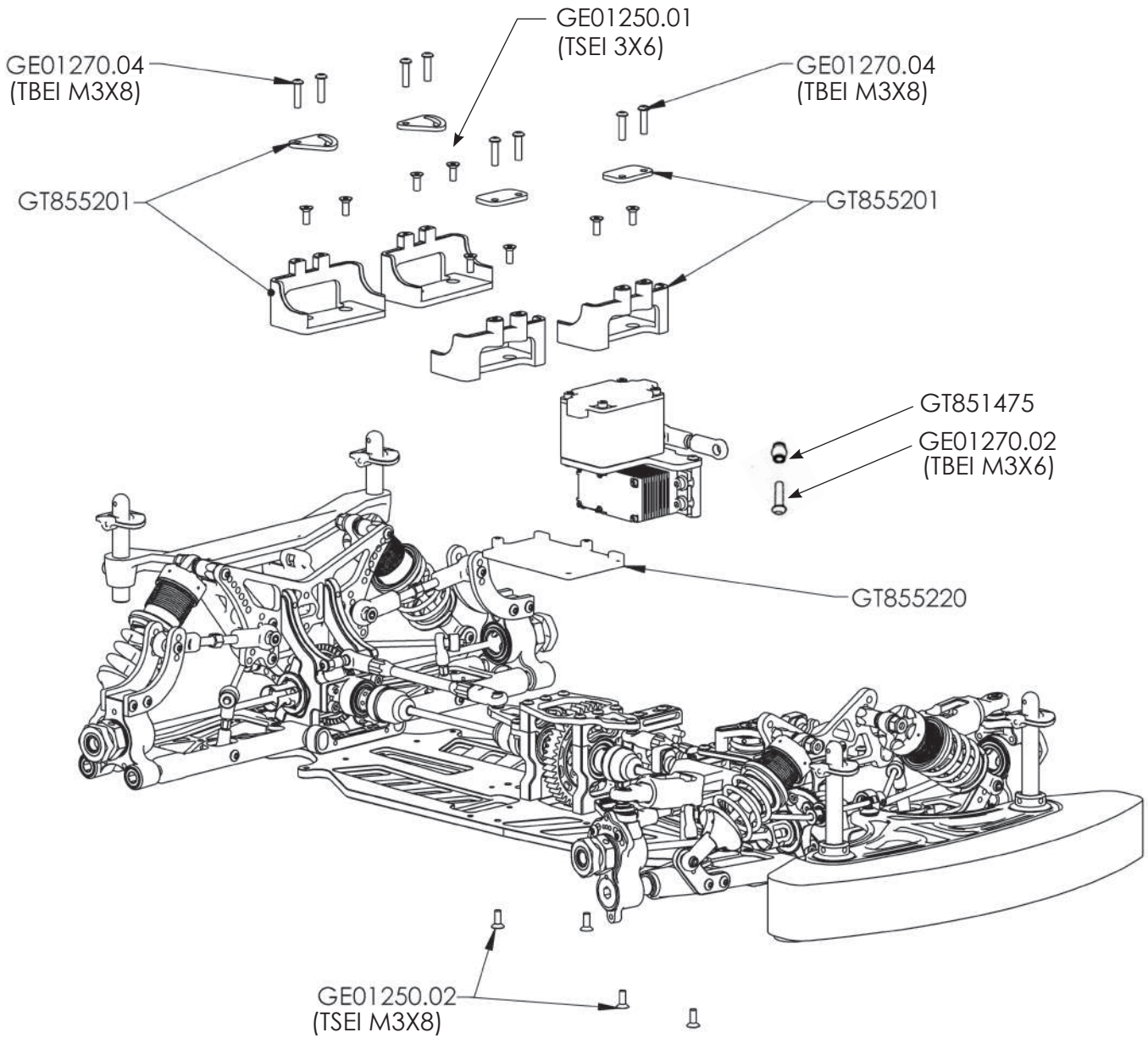

BAG 15

## OPTIONS CLUTCH BELL

| | |
|---|---|
| GT851873 | 14/19 |
| GT851874 | 14/18 |
| GT851871 | 13/18 STANDARD |
| GT851872 | 13/17 |

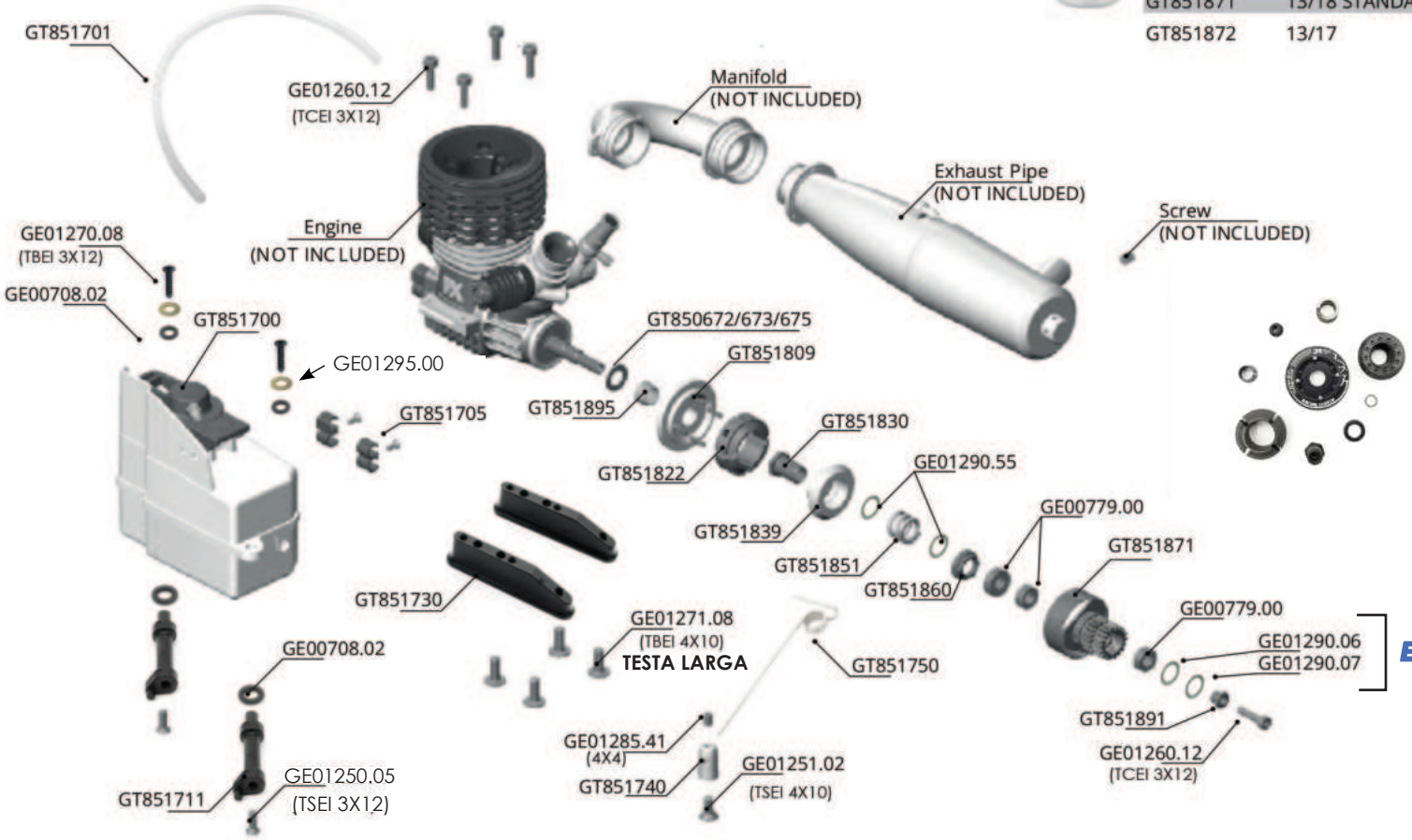


## OPTIONS CLUTCH

| | |
|---|---|
| 34mm | GT851799 |
| 36mm | GT851801 |
| 38mm | GT851805 |

# 45. CLUTCH ASSEMBLING

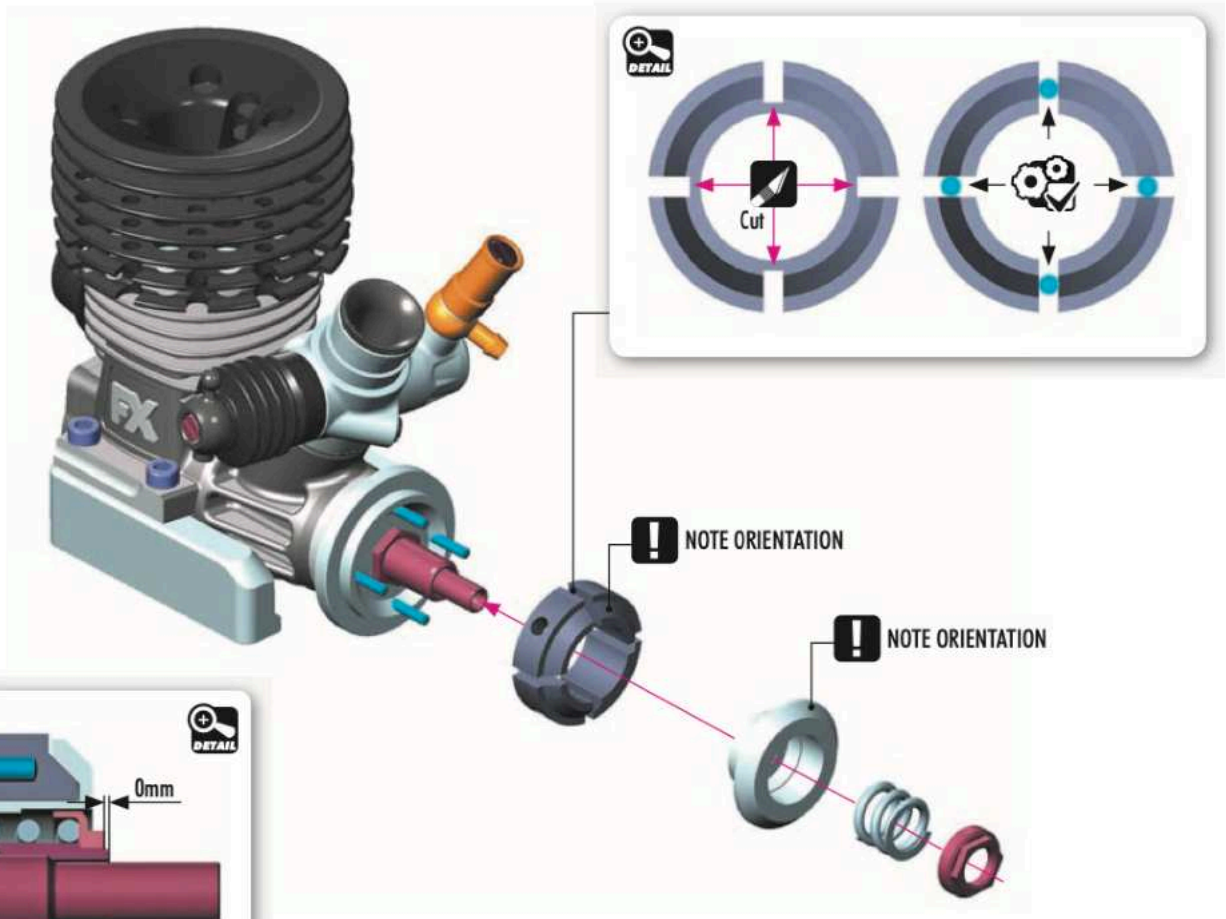


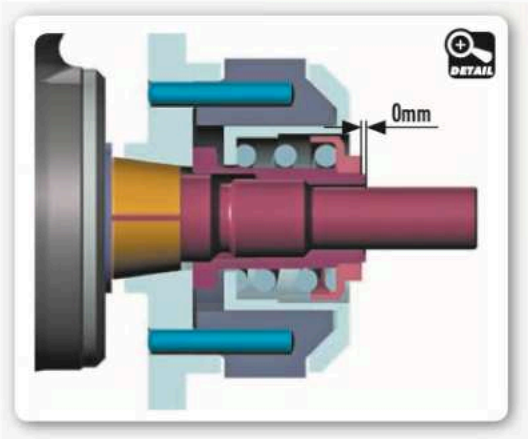

# 46. CLUTCH ASSEMBLING

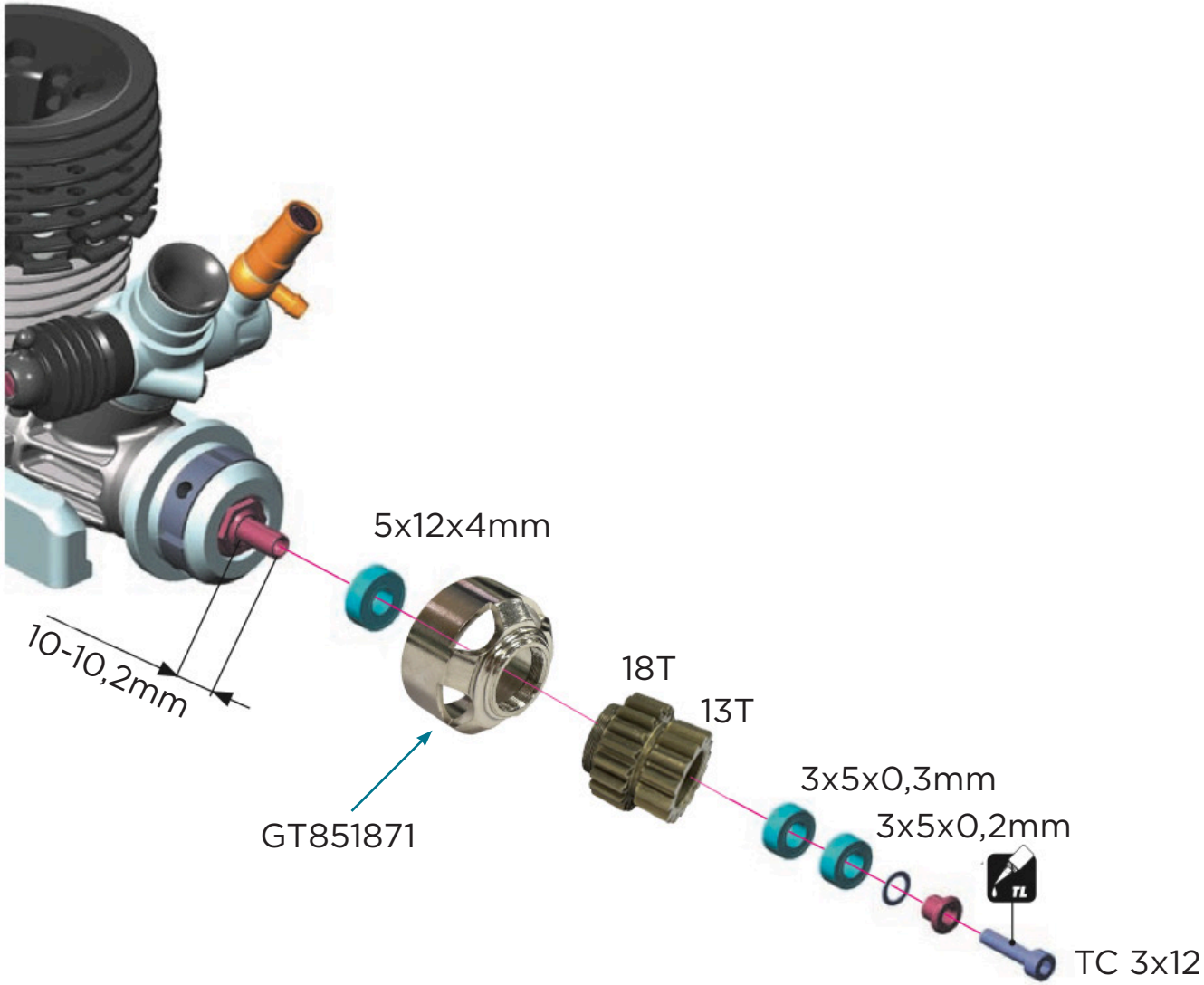

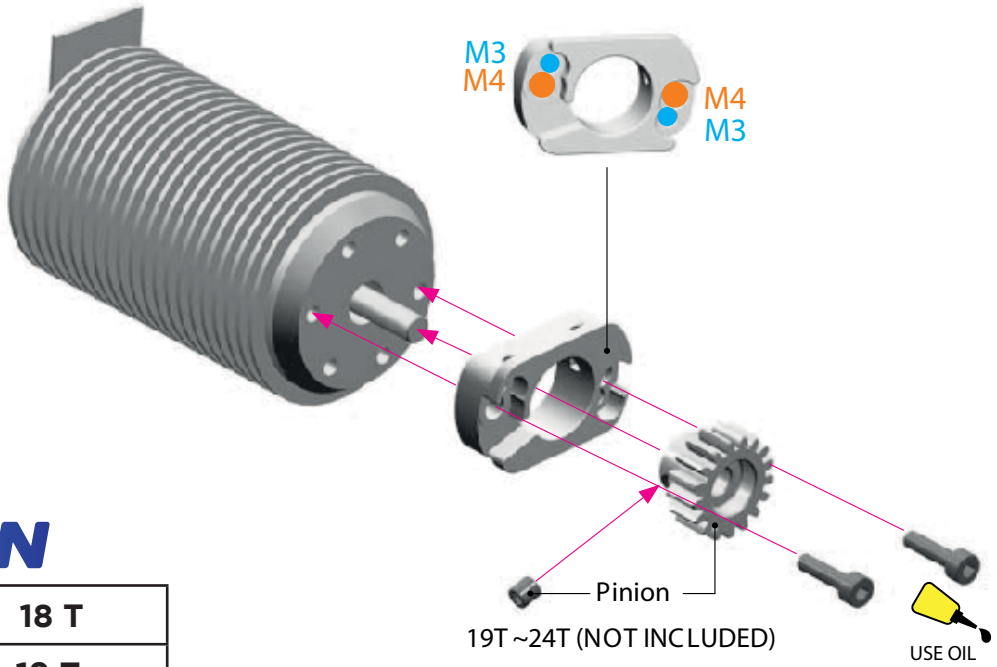


Use M3 or M4 screws which fit your motor.
(M4 INITIAL SETTING)

## PINION

| | |
|---|---|
| GT855118 | 18 T |
| GT855119 | 19 T |
| GT855120 | 20 T |
| GT855121 | 21 T |
| GT855122 | 22 T |
| GT855123 | 23 T |
| GT855124 | 24 T |

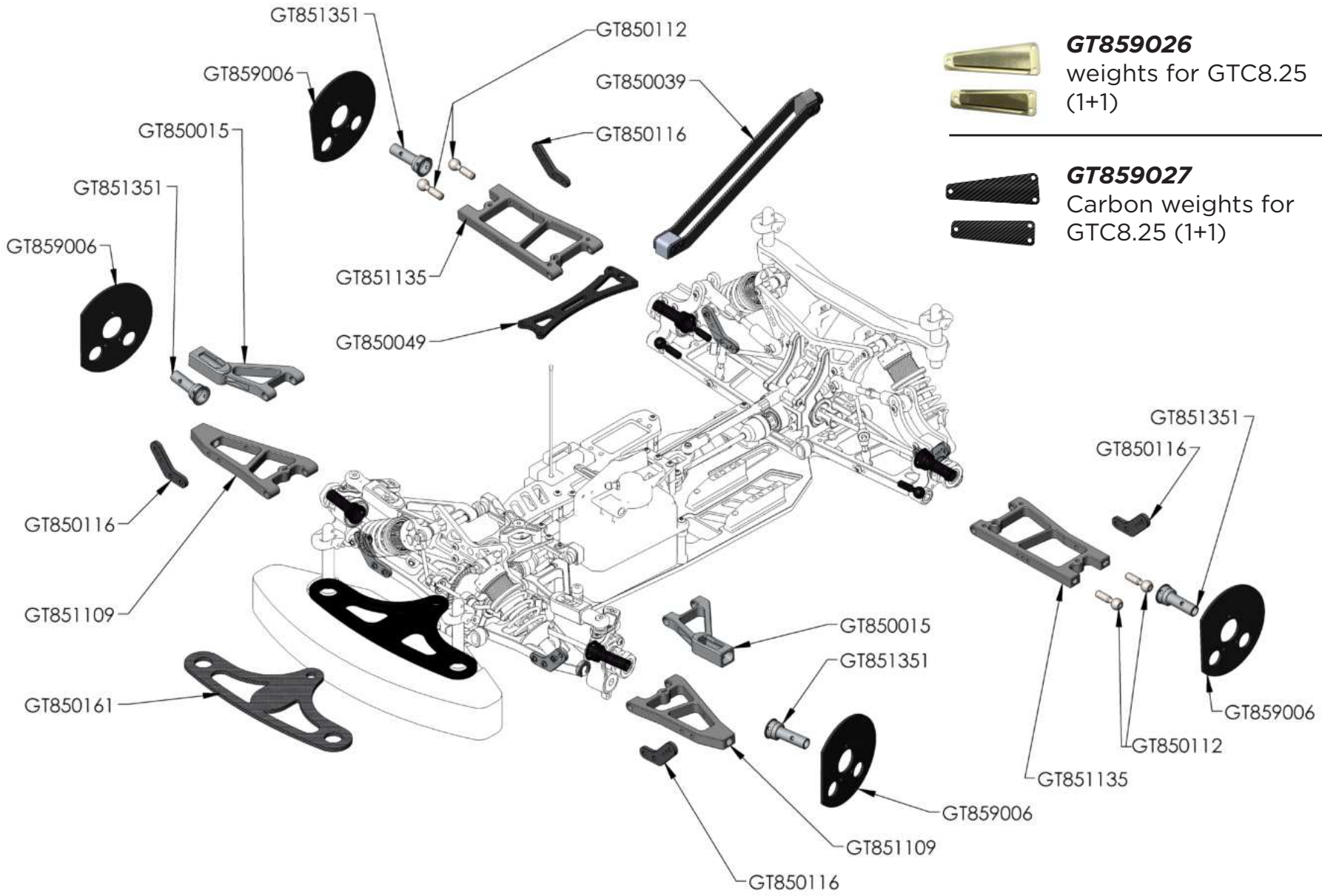


***GT859026***
weights for GTC8.25 (1+1)

***GT859027***
Carbon weights for GTC8.25 (1+1)

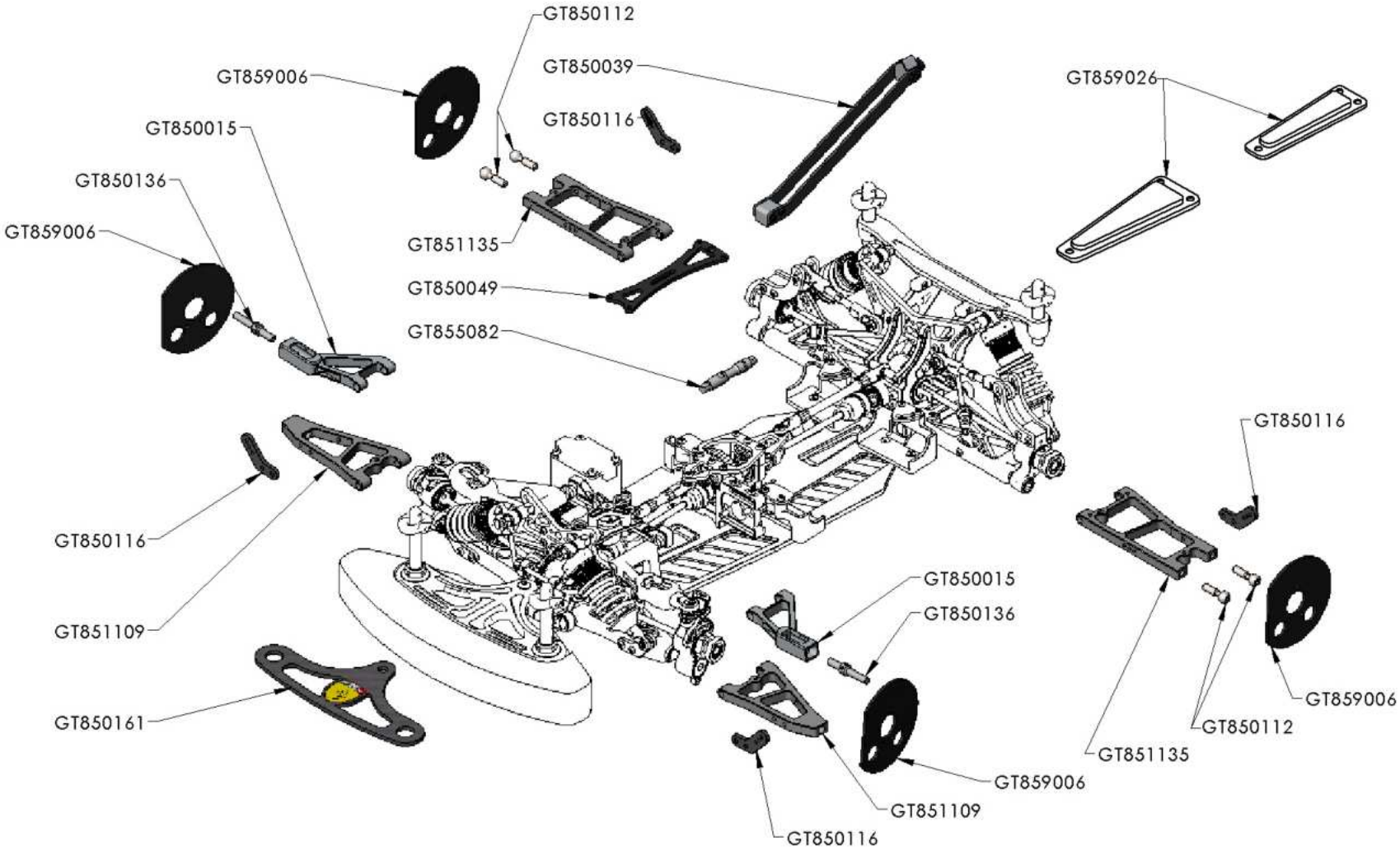
GT850112
GT850039
GT859006
GT850116
GT859026
GT850015
GT850136
GT859006
GT851135
GT850049
GT855082
GT850116
GT850116
GT851109
GT850015
GT850136
GT850161
GT859006
GT850112
GT851135
GT859006
GT851109
GT850116

# MODELTEK

di Noacco Zeno

Via Madonna di Strada,34
33048 San Giovanni al Natisone (UD) Italy

+39 **0432 1849976** | info@genius-racing.com

www.modeltekshop.com | www.genius-racing.com

GENIUSRACING GENIUSRACINGXR