SET UP GTC8.25 eco

NAME
DATE BEST LAP

TRACK

NAME

TYPE: Smooth | Medium | Bumpy | Technical | Mixed | Fast

TRACTION: Low | Medium | High

FRONT SHOCK ABSORBERS REAR

FRONT		REAR
	spring type	
STD DYN	piston type	STD DYN
	number of holes	
	hole diameters (mm)	
	oil viscosity (CST)	
	membrane	
	rebound (%)	
	others	

FRONT ANTI ROLL BARS REAR

FRONT		REAR
	diameter (mm)	

FRONT fixing: Ext. | Mid. | Inside

REAR fixing: Ext. | Mid. | Inside

ARMS

plastic | plastic+carbon | alu.

FRONT DIFFERENTIAL REAR

FRONT		REAR
	oil viscosity (CST)	
	plastics/aluminum	
	pinion gear	
	differential gear	

FRONT TYRES REAR

FRONT		REAR
	brand/type	
	compound	

GEARING

motor pinion

spur gear

ELECTRONICS

motor

speed

battery

OTHERS

body

angle steering

NOTES

FRONT REAR

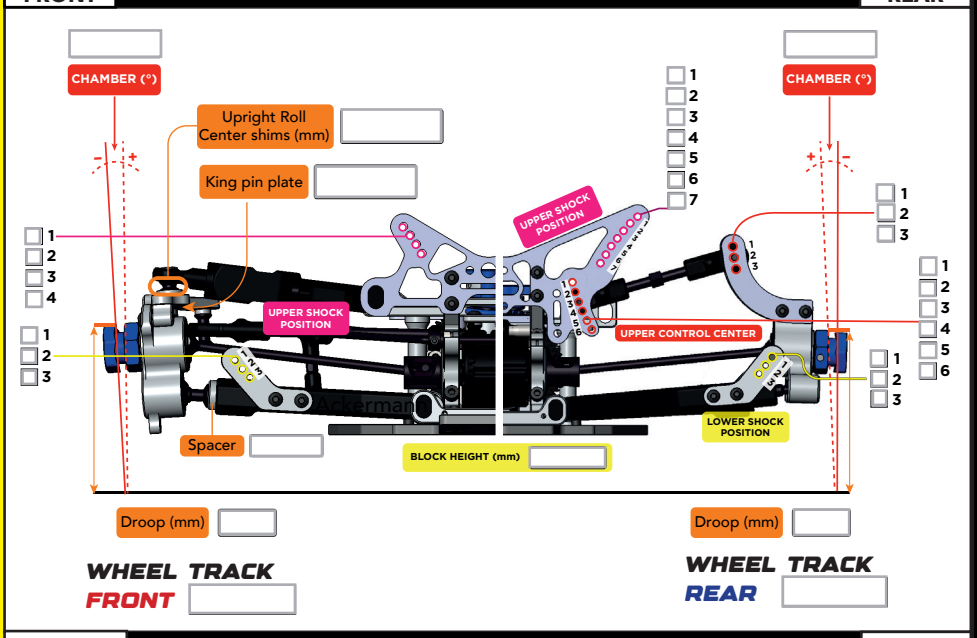

FRONT REAR

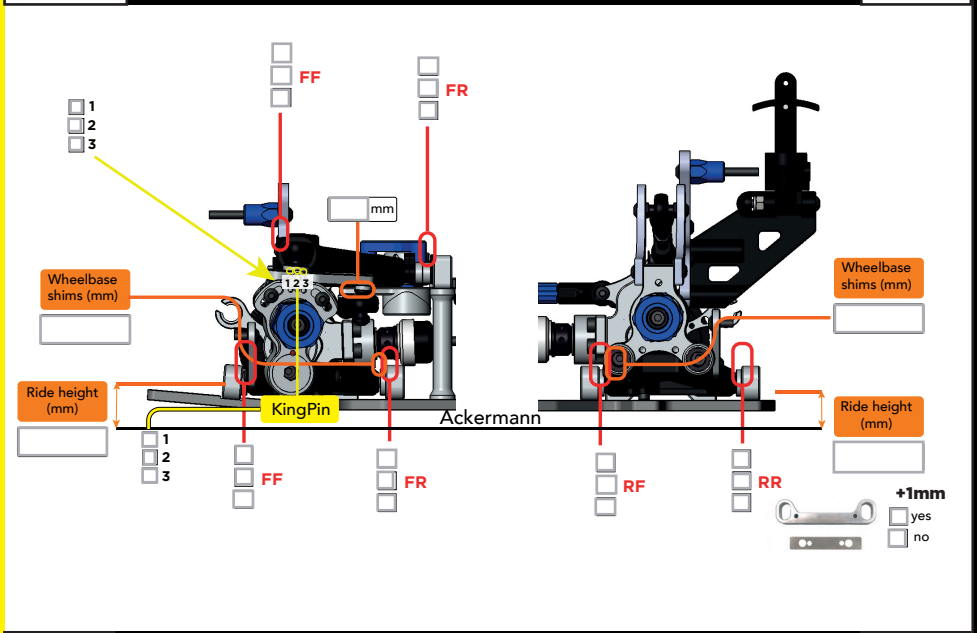
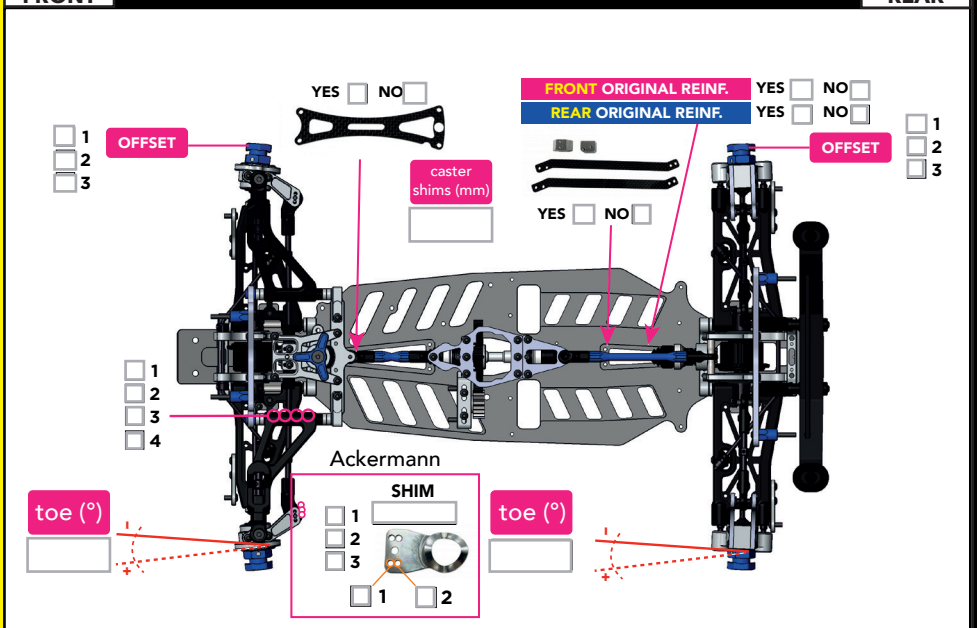
FRONT REAR