SET UP GTC8.25 nitro

NAME
DATE BEST LAP

TRACK

NAME

TYPE: Smooth, Medium, Bumpy, Technical, Mixed, Fast

TRACTION: Low, Medium, High

FRONT SHOCK ABSORBERS REAR

FRONT		REAR
	spring type	
STD DYN	piston type	STD DYN
	number of holes	
	hole diameters (mm)	
	oil viscosity (CST)	
	membrane	
	rebound (%)	
	others	

FRONT ANTI ROLL BARS REAR

FRONT		REAR
	diameter (mm)	

FRONT fixing: Ext. Mid. Inside

REAR fixing: Ext. Mid. Inside

ARMS

plastic, plastic+carbon, alu.

FRONT		REAR
	oil viscosity (CST)	
	plastics/aluminum	
	pinion gear	
	differential gear	

FRONT TYRES REAR

FRONT		REAR
	brand type	
	compound	

1ST GEARING 2ND

1ST		2ND
	pinion gear	
	spur gear	

CLUTCH

spring type
shoe type
spring tighten (mm)

ENGINE

brand /type
muffler
manifold
plug
fuel

OTHERS

body
angle steering

NOTES

FRONT REAR

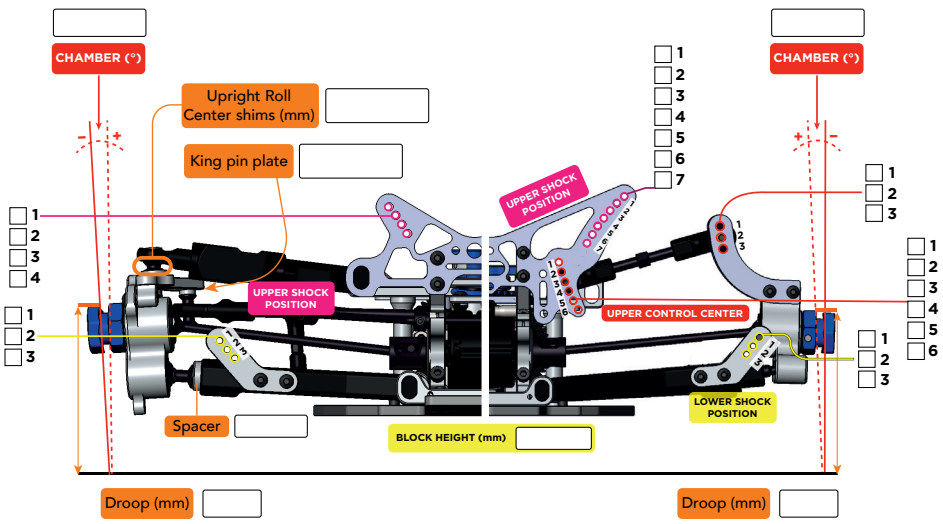

FRONT REAR

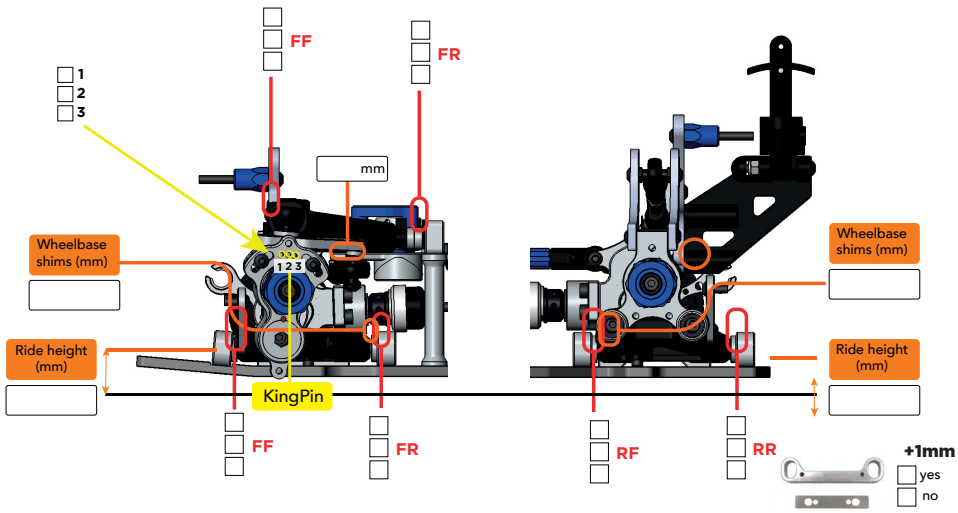
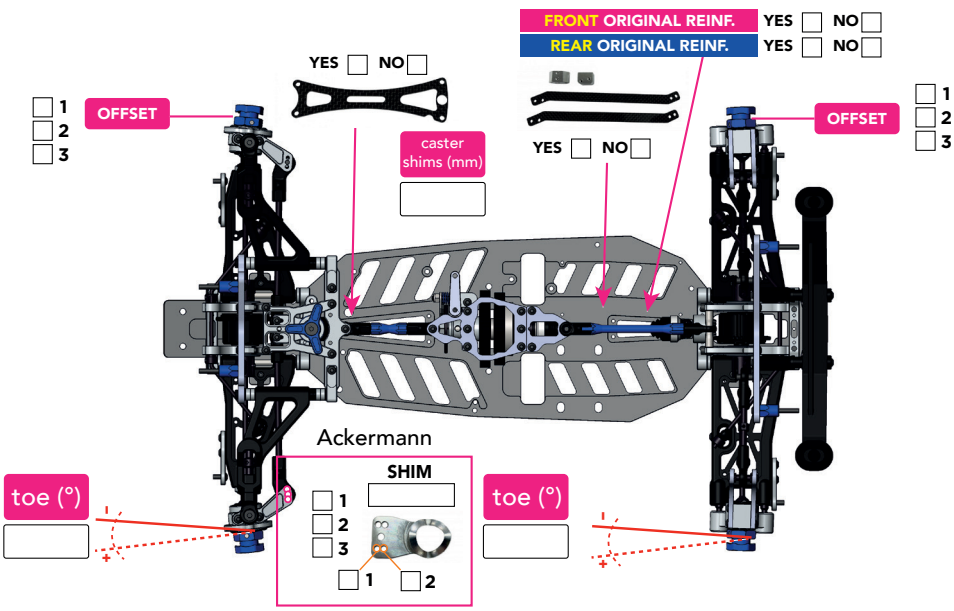
FRONT REAR