SET UP GTC8.25 nitro

NAME
DATE | BEST LAP

TRACK

NAME

TYPE: ☐ Smooth ☐ Medium ☐ Bumpy ☐ Technical ☐ Mixed ☐ Fast

TRACTION: ☐ Low ☐ Medium ☐ High

FRONT SHOCK ABSORBERS REAR

FRONT		REAR
white	spring type	white
STD ✔ DYN ☐	piston type	STD ✔ DYN ☐
STD	number of holes	STD
STD	hole diameters (mm)	STD
900	oil viscosity (CST)	900
STD	membrane	STD
5	rebound (%)	5
	others	

FRONT ANTI ROLL BARS REAR

FRONT		REAR
2.8	diameter (mm)	2.8

FRONT fixing: ☐ Ext. ☐ Mid. ☐ Inside

REAR fixing: ☐ Ext. ☐ Mid. ☐ Inside

ARMS

plastic ✔ plastic+carbon ☐ alu. ☐

FRONT		REAR
500K	oil viscosity (CST)	2.8
PLASTIC	plastics/aluminum	PLASTIC
12	pinion gear	12
42	differential gear	42

FRONT TYRES REAR

FRONT		REAR
PMT	brand type	PMT
Q3	compound	Q1

1ST GEARING 2ND

1ST		2ND
	pinion gear	
	spur gear	

CLUTCH

spring type: STD
shoe type: STD
spring tighten (mm): 0,3

ENGINE

brand /type
muffler
manifold
plug
fuel

OTHERS

body: GT FURY
angle steering: 18 MAX

NOTES

FRONT | REAR

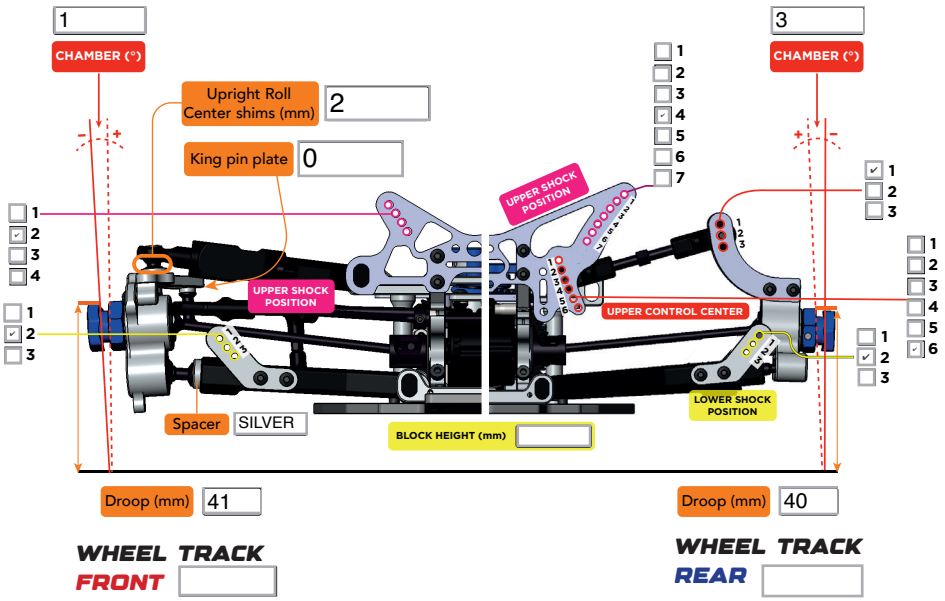

FRONT | REAR

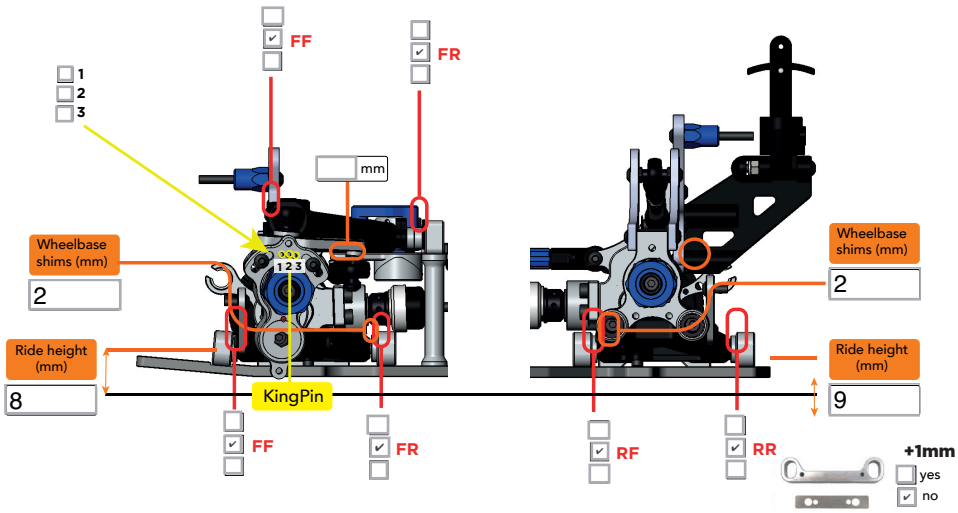
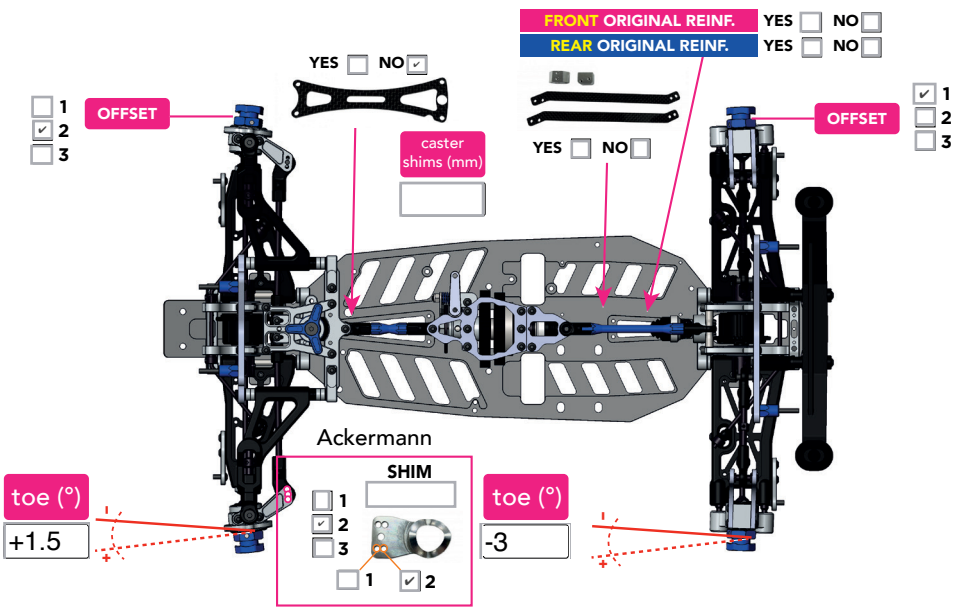
FRONT | REAR